Project Details

Project Name: Robert Cox
Location: 12726 Paschal Rd, Fayetteville, AR 72701, USA
Unique ID: 1P-0-8TOP-HD-57-L-4Hx3W-7HFK
Dealer: _____

Date: Sun Oct 26 2025
Number of Modules: 12
Number of Poles: 1
Date Sold:
_____

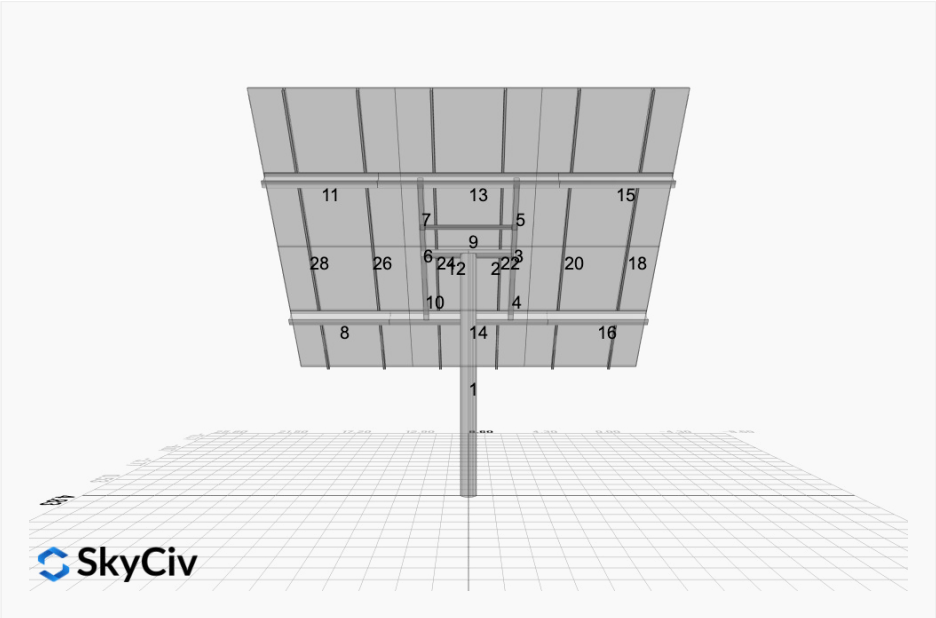

Array Dimensions N/S	15.03 ft
Array Dimensions E/W	17.20 ft
Winter Tilt Angle (Degrees)	50
Front Edge Clearance	5

MT Solar Bill of Materials (1P-0-8TOP-HD-57-L-4Hx3W-7HFK)

Part	Short Description	BOM Qty
MTS-PC-8	8IN Pole Cap Assembly	1
MTS-HF-HD	H-Frame Assembly-HD	1
MTS-HD-Wing-57	57IN HD Wing	4
MTS-CLAMP-HOOK-4PK	Hook Clamp	3

Rail Bill of Materials

Part	Qty
Rails (180in Long)	6x
Rail Attachment	12x
Module Mid Clamp	18x
Module End Clamp	12x
Ground Lug	3x

Site Details:

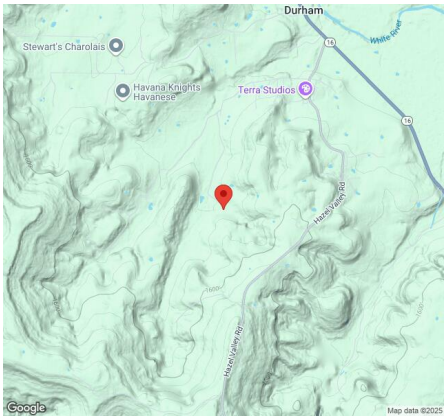

Site Address: 12726 Paschal Rd, Fayetteville, AR 72701, USA

Array Specifications

Duty Classification:	HD
Module Width:	44.60 in
Module Length:	67.80 in
Number of Rows:	4
Number of Columns:	3
Total Number of Modules:	12
Winter Tilt Angle:	50
Front Edge Clearance:	5
Total Array Height at Tilt:	16.52 ft
Total Frame Length:	17.00 ft
Module Info/Notes:	jkm425n-54hl4-b
Array Dimensions N/S:	15.03 ft
Array Dimensions E/W:	17.20 ft
Rail Length:	180.40 in
Rail Spacing:	2.87 ft

Support Specifications

Pole Size:	8in Pipe Sch 40
Pole Length above Grade:	10.76 ft
Number of Poles:	1
Pole Spacing:	0

Foundation Specifications

Foundation Type:	round
Foundation Dimensions:	36 in dia.
Foundation Depth (below grade):	8.8 ft
Foundation Volume:	61.85 ft^3

Site Info

Risk Category:	I
Exposure:	C
Soil Classification:	sand
Site Location:	12726 Paschal Rd, Fayetteville, AR 72701, USA
Wind Speed:	101 mph

Snow Load:	10 psf

Design Disclaimer

This software should be used for preliminary designs and should not be used as a final design unless reviewed, verified and designed by a qualified structural engineer.

AutoDesigner Input


```
{"wind_speed_override":null,"snow_load_override":null,"direct_snow_load":false,"add_angle_brace":false,"product_type":"Beam","designer_name":
"Andrew Coldiron ","designer_email":"andrew@newfarmsolar.com ","designer_phone":"(512) 897-7001","project_id":"Robert Cox
","site_address":"12726 Paschal Rd, Fayetteville, AR 72701, USA","module_info":"jkm425n-54hl4-
b","module_width":44.6,"module_length":67.8,"number_rows":"4","number_columns":3,"pole_mount_section":"4_40","core_pipe_width":65,"core_pipe_
section":"2_40","adjuster_section":"2_40","core_beam_height":65,"core_beam_section":"HSS3x2x1/8","main_pipe_section":"2_12GA","pole_spacing":
"15","tilt_angle":50,"ground_clearance":5,"risk_category":"I","exposure_category":"C","frame_duty_override":"HD","pole_override":"8_40","soil
_type":"sand","customer_foundation_override":"36_Round","foundation_type":"Round","foundation_size":36,"check_rails":false}
```


Design Notes:

- Deflection checks are set to L/1 due to manufacturer structural design intent
- Foundation Soil Parameters used in this Autodesign are all estimates, proper geotechnical reports are required to confirm soil profiles
- Wind speeds, snow loads and other site specific results are based on ASCE 7-16
- Steel frame design checks are based on AISC 360-16 LRFD
- Design / analysis of fixings and connections are not carried out by this module.
- Impacts of eccentrically applied, partial or pattern loading are not considered by this module.
- Foundation Design and Sizing is approximate only

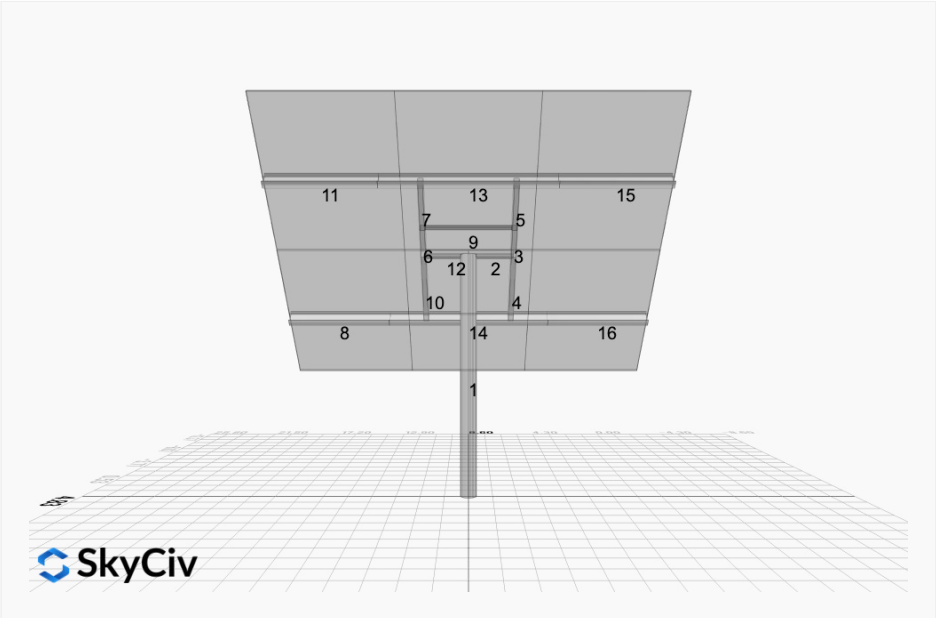

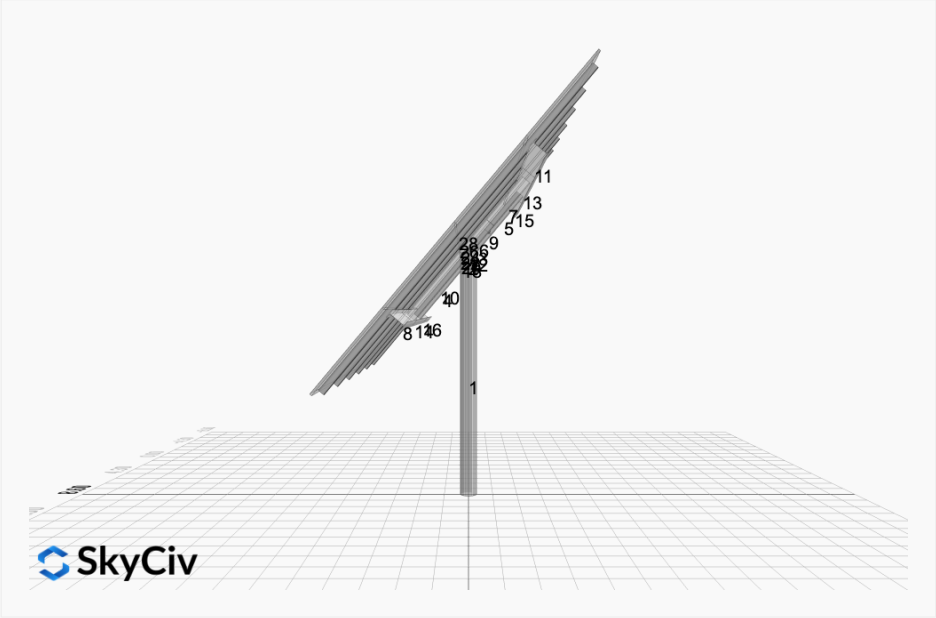

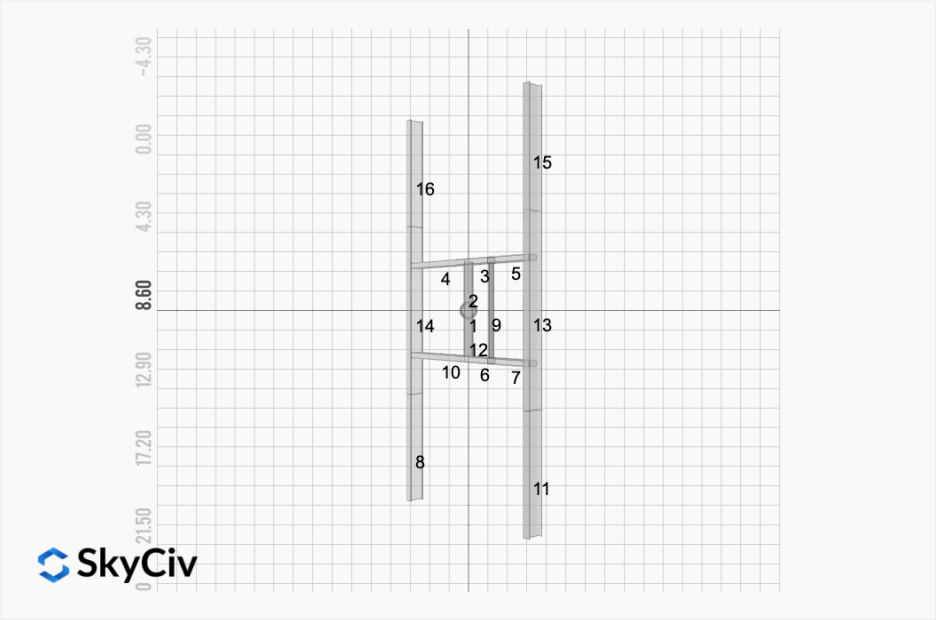
-4.30
0.00
4.30
8.60
12.90
17.20
21.50
0
16
15
4
3
5
2
14
1
9
13
12
10
6
7
8
11
SkyCiv

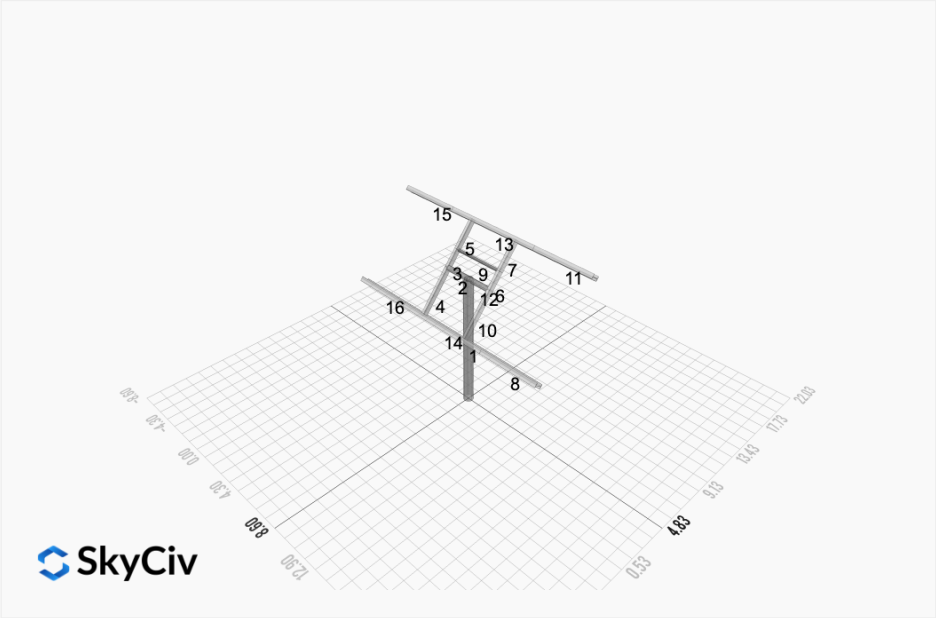
15
5
13
3
9
7
11
2
12
6
16
4
10
14
1
8
-4.30
0.00
4.30
8.60
12.90
0.53
4.83
9.13
13.43
17.73
22.03
SkyCiv

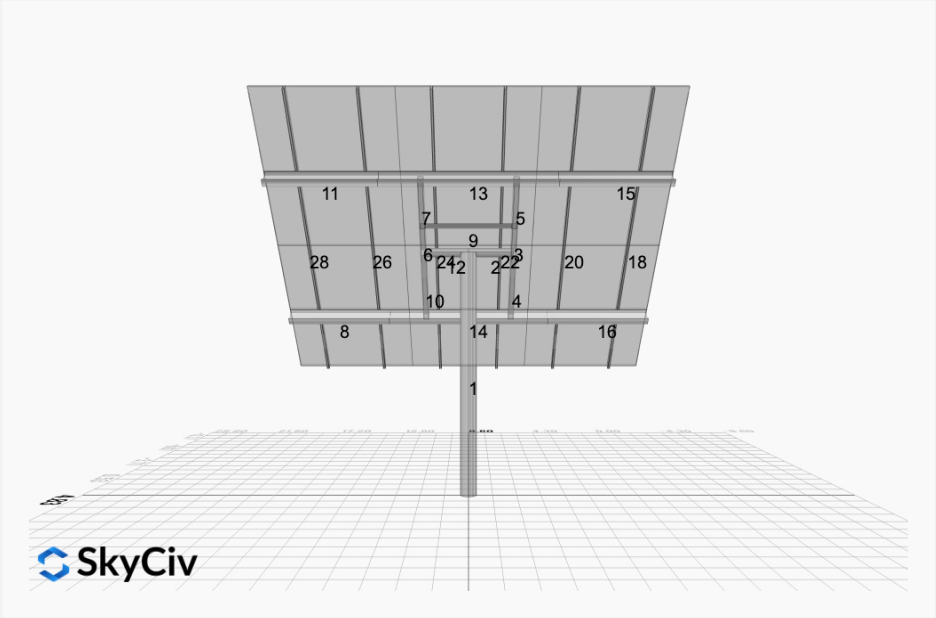
11
13
15
7
5
9
28
26
6
24
12
2
22
3
20
18
10
4
8
14
16
1
SkyCiv

FEM Results (Envelope Worst Case)

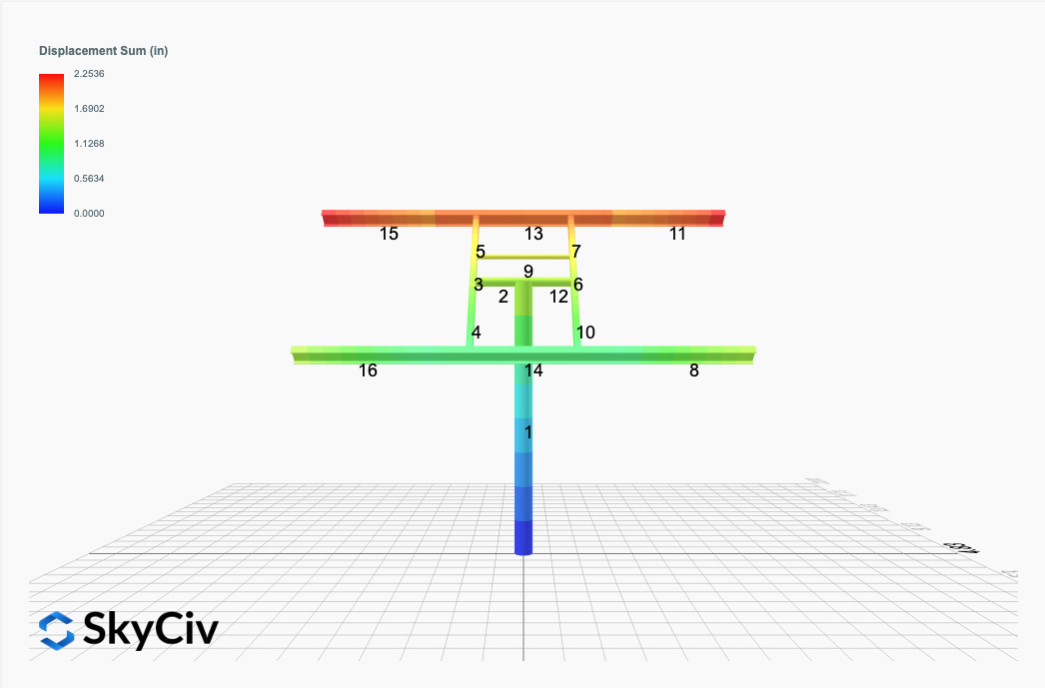

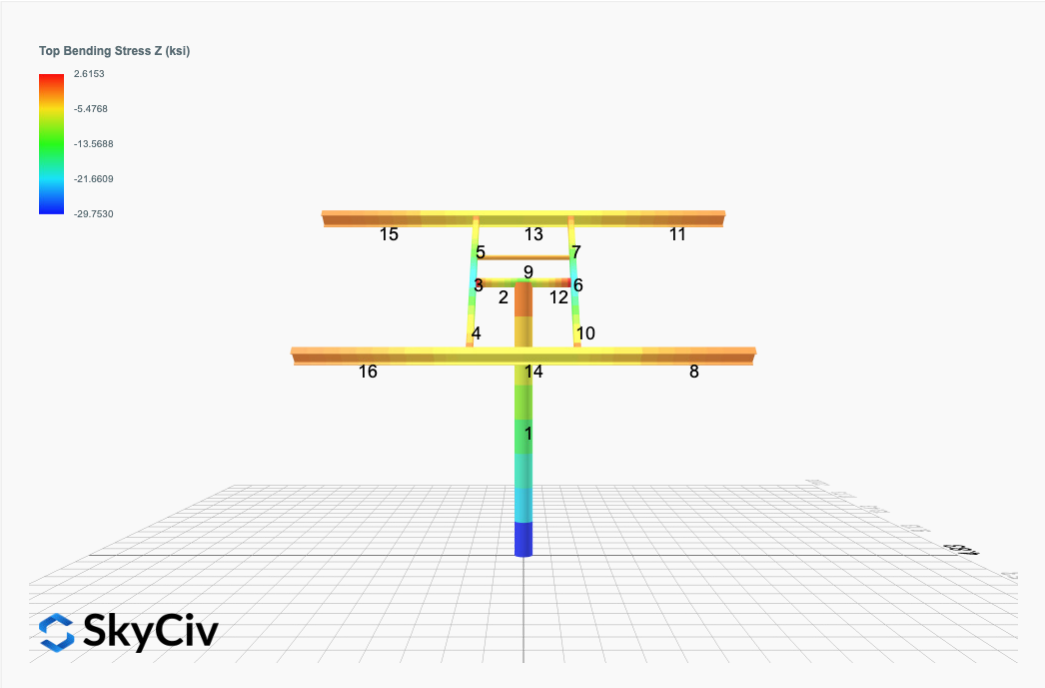

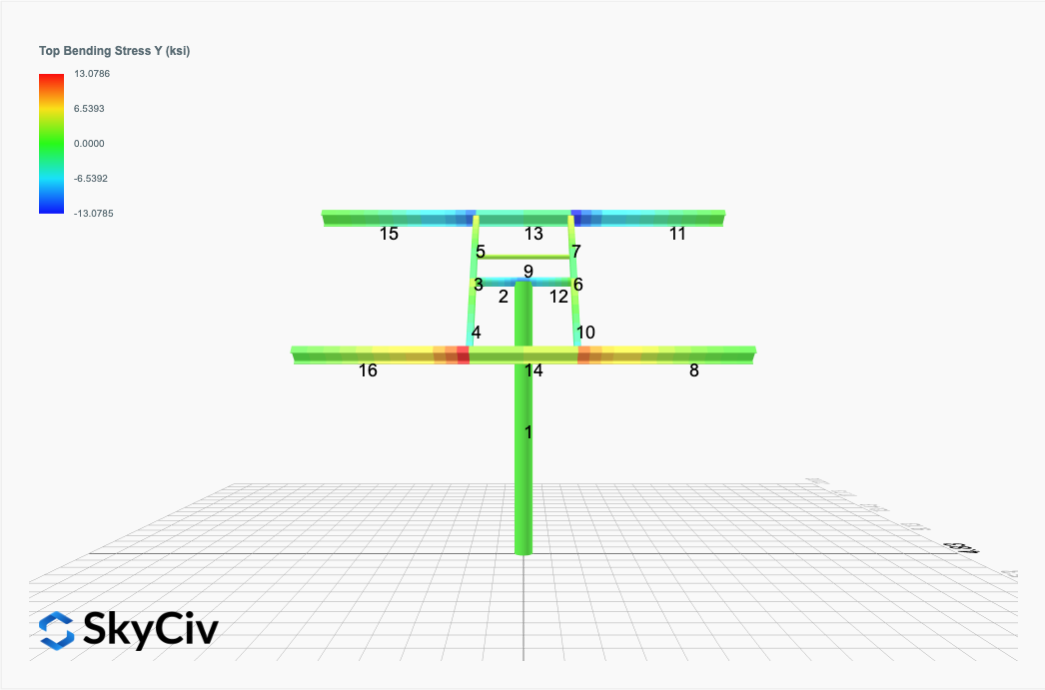
Top Bending Stress Y (ksi)
13.0786
6.5393
0.0000
-6.5392
-13.0785
15
13
11
5
7
9
3
6
2
12
4
10
16
14
8
1
SkyCiv

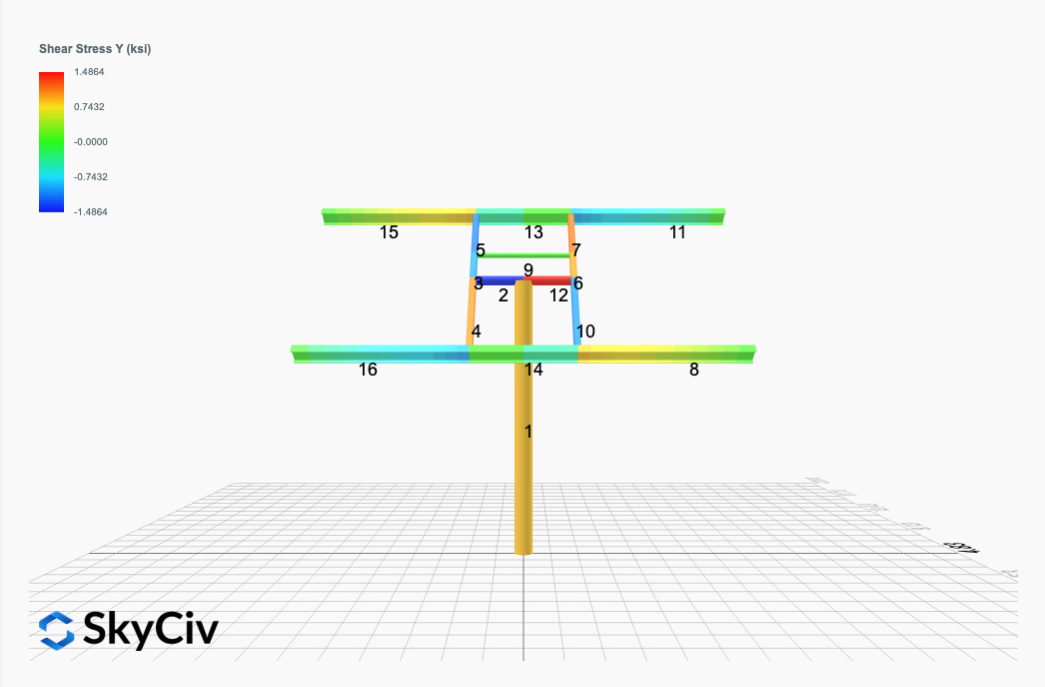
Shear Stress Y (ksi)
1.4864
0.7432
-0.0000
-0.7432
-1.4864
15
13
11
5
7
9
3
6
2
12
4
10
16
14
8
1
SkyCiv

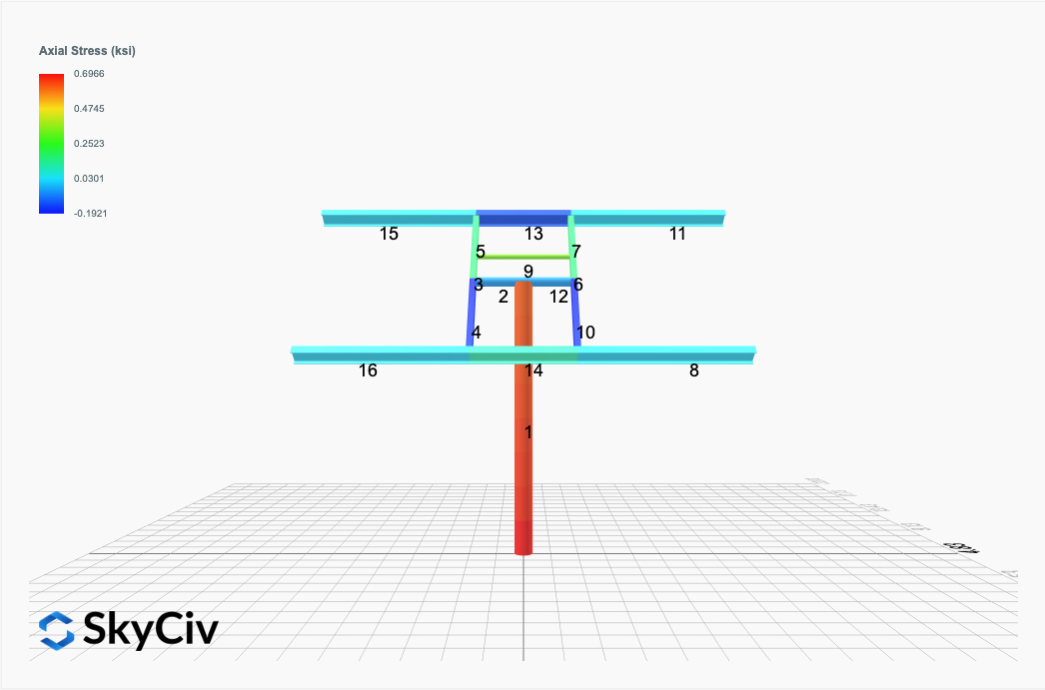
Axial Stress (ksi)
0.6966
0.4745
0.2523
0.0301
-0.1921
15
13
11
5
7
9
3
2
12
6
4
10
16
14
8
1
SkyCiv

Reaction Forces for Foundation 1 (Node ID#1), (kip, kip-ft)

LRFD Load Combination Results

Name	Fx	Fy	Fz	Mx	My	Mz
ULS: 1. 1.4D	0.0000	2.8867	0.0000	0.0000	-0.0000	0.0323
ULS: 2. 1.2D + 1.6L + 0.5(S or Lr or R)	0.0000	2.6549	0.0000	0.0000	-0.0000	0.0278
ULS: 2. 1.2D + 1.6L + 0.5(S or Lr or R)	0.0000	2.4743	0.0000	0.0000	-0.0000	0.0269
ULS: 3. 1.2D + 1.6(S or Lr or R) + L	0.0000	3.0523	0.0000	0.0000	-0.0000	0.0302
ULS: 5. 1.2D + E + L + 0.2S	0.0000	2.5465	0.0000	0.0000	-0.0000	0.0273
ULS: 7. 0.9D + 1.0E	0.0000	1.8557	0.0000	0.0000	-0.0000	0.0192
ULS: 4. 1.2D + W + L + 0.5(S or Lr or R)_Wind downforce Case A only	-3.8093	5.8513	0.0000	0.0000	0.0000	41.6767
ULS: 4. 1.2D + W + L + 0.5(S or Lr or R)_Wind downforce Case B only	0.0000	2.6549	0.0000	0.0000	-0.0000	0.0278
ULS: 4. 1.2D + W + L + 0.5(S or Lr or R)_Wind uplift Case A only	3.8093	-0.5415	0.0000	-0.0000	-0.0000	-40.9163
ULS: 4. 1.2D + W + L + 0.5(S or Lr or R)_Wind uplift Case B only	0.0000	2.6549	0.0000	0.0000	-0.0000	0.0278
ULS: 4. 1.2D + W + L + 0.5(S or Lr or R)_Wind downforce Case A only	-3.8093	5.6707	0.0000	0.0000	0.0000	41.6536
ULS: 4. 1.2D + W + L + 0.5(S or Lr or R)_Wind downforce Case B only	0.0000	2.4743	0.0000	0.0000	-0.0000	0.0269
ULS: 4. 1.2D + W + L + 0.5(S or Lr or R)_Wind uplift Case A only	3.8093	-0.7221	0.0000	-0.0000	-0.0000	-40.8959
ULS: 4. 1.2D + W + L + 0.5(S or Lr or R)_Wind uplift Case B only	0.0000	2.4743	0.0000	0.0000	-0.0000	0.0269
ULS: 3. 1.2D + 1.6(S or Lr or R) + 0.5W_Wind downforce Case A only	-1.9047	4.6505	0.0000	0.0000	-0.0000	20.7894
ULS: 3. 1.2D + 1.6(S or Lr or R) + 0.5W_Wind downforce Case B only	0.0000	3.0523	0.0000	0.0000	-0.0000	0.0302
ULS: 3. 1.2D + 1.6(S or Lr or R) + 0.5W_Wind uplift Case A only	1.9047	1.4542	0.0000	0.0000	-0.0000	-20.5523
ULS: 3. 1.2D + 1.6(S or Lr or R) + 0.5W_Wind uplift Case B only	0.0000	3.0523	0.0000	0.0000	-0.0000	0.0302
ULS: 3. 1.2D + 1.6(S or Lr or R) + 0.5W_Wind downforce Case A only	-1.9047	4.0725	0.0000	0.0000	-0.0000	20.7509
ULS: 3. 1.2D + 1.6(S or Lr or R) + 0.5W_Wind downforce Case B only	0.0000	2.4743	0.0000	0.0000	-0.0000	0.0269
ULS: 3. 1.2D + 1.6(S or Lr or R) + 0.5W_Wind uplift Case A only	1.9047	0.8761	0.0000	0.0000	-0.0000	-20.5212
ULS: 3. 1.2D + 1.6(S or Lr or R) + 0.5W_Wind uplift Case B only	0.0000	2.4743	0.0000	0.0000	-0.0000	0.0269
ULS: 6. 0.9D + 1.0W_Wind downforce Case A only	-3.8093	5.0521	0.0000	0.0000	0.0000	41.5716
ULS: 6. 0.9D + 1.0W_Wind downforce Case B only	0.0000	1.8557	0.0000	0.0000	-0.0000	0.0192
ULS: 6. 0.9D + 1.0W_Wind uplift Case A only	3.8093	-1.3407	0.0000	-0.0000	-0.0000	-40.8321
ULS: 6. 0.9D + 1.0W_Wind uplift Case B only	0.0000	1.8557	0.0000	0.0000	-0.0000	0.0192

ASD Load Combination Results

Name	Fx	Fy	Fz	Mx	My	Mz
ULS: 1. D	0.0000	2.0619	0.0000	0.0000	-0.0000	0.0217
ULS: 2. D + L	0.0000	2.0619	0.0000	0.0000	-0.0000	0.0217
ULS: 3. D + (S or Lr or R)	0.0000	2.4232	0.0000	0.0000	-0.0000	0.0234
ULS: 3. D + (S or Lr or R)	0.0000	2.0619	0.0000	0.0000	-0.0000	0.0217
ULS: 4. D + 0.75L + 0.75(S or Lr or R)	0.0000	2.3329	0.0000	0.0000	-0.0000	0.0229
ULS: 4. D + 0.75L + 0.75(S or Lr or R)	0.0000	2.0619	0.0000	0.0000	-0.0000	0.0217
ULS: 5b. D + 0.7E	0.0000	2.0619	0.0000	0.0000	-0.0000	0.0217
ULS: 6b. D + 0.75L + 0.75(0.7)E + 0.75S	0.0000	2.3329	0.0000	0.0000	-0.0000	0.0229
ULS: 8. 0.6D + 0.7E	0.0000	1.2371	0.0000	0.0000	-0.0000	0.0122
ULS: 5a. D + 0.6W_Wind downforce Case A only	-2.2856	3.9797	0.0000	0.0000	0.0000	24.8824
ULS: 5a. D + 0.6W_Wind downforce Case B only	0.0000	2.0619	0.0000	0.0000	-0.0000	0.0217
ULS: 5a. D + 0.6W_Wind uplift Case A only	2.2856	0.1441	0.0000	0.0000	-0.0000	-24.5862
ULS: 5a. D + 0.6W_Wind uplift Case B only	0.0000	2.0619	0.0000	0.0000	-0.0000	0.0217
ULS: 6a. D + 0.75L + 0.75(0.6)W + 0.75(S or Lr or R)_Wind downforce Case A only	-1.7142	3.7712	0.0000	0.0000	-0.0000	18.6592
ULS: 6a. D + 0.75L + 0.75(0.6)W + 0.75(S or Lr or R)_Wind downforce Case B only	0.0000	2.3329	0.0000	0.0000	-0.0000	0.0229
ULS: 6a. D + 0.75L + 0.75(0.6)W + 0.75(S or Lr or R)_Wind uplift Case A only	1.7142	0.8945	0.0000	0.0000	-0.0000	-18.4709
ULS: 6a. D + 0.75L + 0.75(0.6)W + 0.75(S or Lr or R)_Wind uplift Case B only	0.0000	2.3329	0.0000	0.0000	-0.0000	0.0229

Name	Fx	Fy	Fz	Mx	My	Mz
ULS: 6a. D + 0.75L + 0.75(0.6)W + 0.75(S or Lr or R)_Wind downforce Case A only	-1.7142	3.5003	0.0000	0.0000	-0.0000	18.6433
ULS: 6a. D + 0.75L + 0.75(0.6)W + 0.75(S or Lr or R)_Wind downforce Case B only	0.0000	2.0619	0.0000	0.0000	-0.0000	0.0217
ULS: 6a. D + 0.75L + 0.75(0.6)W + 0.75(S or Lr or R)_Wind uplift Case A only	1.7142	0.6235	0.0000	0.0000	-0.0000	-18.4577
ULS: 6a. D + 0.75L + 0.75(0.6)W + 0.75(S or Lr or R)_Wind uplift Case B only	0.0000	2.0619	0.0000	0.0000	-0.0000	0.0217
ULS: 7. 0.6D + 0.6W_Wind downforce Case A only	-2.2856	3.1550	0.0000	0.0000	0.0000	24.8140
ULS: 7. 0.6D + 0.6W_Wind downforce Case B only	0.0000	1.2371	0.0000	0.0000	-0.0000	0.0122
ULS: 7. 0.6D + 0.6W_Wind uplift Case A only	2.2856	-0.6807	0.0000	0.0000	-0.0000	-24.5383
ULS: 7. 0.6D + 0.6W_Wind uplift Case B only	0.0000	1.2371	0.0000	0.0000	-0.0000	0.0122

Worst Case Reactions (LRFD)

Note: Downforce / downwind wind load cases are assumed to govern.

Result	Value (kip, kip-ft)
Axial	5.8513
Shear X	-3.8093
Shear Z	0.0000
Moment X	0.0000
Moment Y (Twist)	0.0000
Moment Z	41.6767

Worst Case Reactions (ASD)

Note: Downforce / downwind wind load cases are assumed to govern.

Result	Value (kip, kip-ft)
Axial	3.9797
Shear X	-2.2856
Shear Z	0.0000
Moment X	0.0000
Moment Y (Twist)	0.0000
Moment Z	24.8824

Project Details

Design Code: AISC 360-16 LRFD
Provision: LRFD
Country: United States

User Name: sales@mtsolar.us
Unit System: imperial

Design Input Information

Design Factors			
Φ_t	Φ_c	Φ_b	Φ_v
0.9	0.9	0.9	0.9

Design Materials			
ID	E (ksi)	F_y (ksi)	F_u (ksi)
1	29000	50	65

Section Dimensions

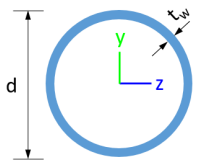

ID	Name	d (in)	t_w (in)					
2	2in Pipe Sch 80	2.38	0.22					
5	4in Pipe Sch 80	4.50	0.34					
9	8in Pipe Sch 40	8.63	0.32					

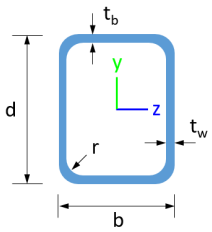

ID	Name	d (in)	b (in)	t_w (in)	t_b (in)	r (in)		
16	HSS5x3x3/16	5.00	3.00	0.17	0.17	0.17		

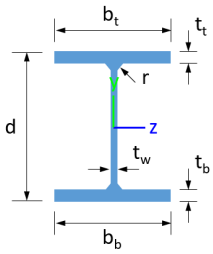

ID	Name	d (in)	t_w (in)	b_t (in)	b_b (in)	t_t (in)	t_b (in)	r (in)
19	W8x10	7.89	0.17	3.94	3.94	0.20	0.20	0.30

Section Properties

ID	Name	A (in^2)	J (in^4)	I_{yp} (in^4)	I_{zp} (in^4)	I_w (in^6)	S_{yp} (in^3)	S_{zp} (in^3)

2	2in Pipe Sch 80	1.48	1.74	0.87	0.87	0.00	1.02	1.02
5	4in Pipe Sch 80	4.41	19.22	9.61	9.61	0.00	5.85	5.85
9	8in Pipe Sch 40	8.40	144.98	72.49	72.49	0.00	22.21	22.21
16	HSS5x3x3/16	2.58	8.64	3.85	8.53	0.73	2.96	4.21
19	W8x10	2.96	0.04	2.09	30.80	30.90	1.66	8.87

Member Properties								
Member ID	Section ID	K_zL (ft)	K_yL (ft)	L_b (ft)	C_b	LST	LSC	LD
1	9	6.99	6.99	10.76	-	300	200	250
2	5	1.30	1.30	2.00	-	300	200	250
3	16	0.92	0.92	1.42	1.19,1.19,1.19,1.19,1.19,1.19,1.18,1.19,1.17,1.19,1.18,1.19,1.17,1.19,1.18,1.19,1.16,1.19,1.18,1.19,1.17,1.19,1.18,1.19,1.18,1.19,1.19,1.19,1.19,1.19,1.19,1.19,1.19,1.19,1.19,1.18,1.19,1.17,1.19,1.18,1.19,1.17,1.19,1.18,1.19,1.17,1.19,1.18,1.19,1.18,1.19	300	200	250
4	16	2.44	2.44	3.75	1.69,1.68,1.69,1.68,1.69,1.69,1.67,1.68,1.66,1.68,1.67,1.69,1.66,1.69,1.67,1.68,1.64,1.68,1.67,1.69,1.65,1.69,1.67,1.69,1.66,1.69,1.69,1.69,1.68,1.69,1.68,1.69,1.69,1.68,1.69,1.67,1.69,1.66,1.69,1.67,1.68,1.65,1.68,1.67,1.69,1.65,1.69,1.67,1.69,1.66,1.69	300	200	250
5	16	1.52	1.52	2.33	1.68,1.68,1.68,1.68,1.68,1.68,1.67,1.68,1.66,1.68,1.67,1.68,1.66,1.68,1.67,1.68,1.65,1.68,1.67,1.68,1.65,1.68,1.67,1.68,1.66,1.68,1.68,1.68,1.68,1.68,1.68,1.68,1.68,1.68,1.68,1.67,1.68,1.66,1.68,1.67,1.68,1.65,1.68,1.67,1.68,1.66,1.68,1.67,1.68,1.66,1.68	300	200	250
6	16	0.92	0.92	1.42	1.19,1.19,1.19,1.19,1.19,1.19,1.18,1.19,1.17,1.19,1.18,1.19,1.17,1.19,1.18,1.19,1.16,1.19,1.18,1.19,1.17,1.19,1.18,1.19,1.18,1.19,1.19,1.19,1.19,1.19,1.19,1.19,1.19,1.19,1.19,1.18,1.19,1.17,1.19,1.18,1.19,1.17,1.19,1.18,1.19,1.17,1.19,1.18,1.19,1.18,1.19	300	200	250
7	16	1.52	1.52	2.33	1.68,1.68,1.68,1.68,1.68,1.68,1.67,1.68,1.66,1.68,1.67,1.68,1.66,1.68,1.67,1.68,1.65,1.68,1.67,1.68,1.65,1.68,1.67,1.68,1.66,1.68,1.68,1.68,1.68,1.68,1.68,1.68,1.68,1.68,1.68,1.67,1.68,1.66,1.68,1.67,1.68,1.65,1.68,1.67,1.68,1.66,1.68,1.67,1.68,1.66,1.68	300	200	250
8	19	9.97	9.97	4.75	2.33,2.33,2.33,2.33,2.33,2.33,2.33,2.33,2.33,2.33,2.33,2.33,2.33,2.33,2.33,2.33,2.33,2.33,2.33,2.33,2.33,2.33,2.33,2.33,2.33,2.33,2.33,2.33,2.33,2.33,2.33,2.33,2.33,2.33,2.33,2.33,2.33,2.33,2.33,2.33,2.33,2.33,2.33,2.33,2.33,2.33,2.33,2.33,2.33,2.33,2.33	300	200	250
9	2	2.60	2.60	4.00	-	300	200	250
10	16	2.44	2.44	3.75	1.69,1.68,1.69,1.68,1.69,1.69,1.67,1.68,1.66,1.68,1.67,1.69,1.66,1.69,1.67,1.68,1.64,1.68,1.67,1.69,1.65,1.69,1.67,1.69,1.66,1.69,1.69,1.69,1.68,1.69,1.68,1.69,1.69,1.68,1.69,1.67,1.69,1.66,1.69,1.67,1.68,1.65,1.68,1.67,1.69,1.65,1.69,1.67,1.69,1.66,1.69	300	200	250
11	19	9.97	9.97	4.75	2.33,2.33,2.33,2.33,2.33,2.33,2.33,2.33,2.33,2.33,2.33,2.33,2.33,2.33,2.33,2.33,2.33,2.33,2.33,2.33,2.33,2.33,2.33,2.33,2.33,2.33,2.33,2.33,2.33,2.33,2.33,2.33,2.33,2.33,2.33,2.33,2.33,2.33,2.33,2.33,2.33,2.33,2.33,2.33,2.33,2.33,2.33,2.33,2.33,2.33,2.33	300	200	250
12	5	1.30	1.30	2.00	-	300	200	250
13	19	4.88	4.00	7.50	1.03,1.03,1.03,1.03,1.03,1.03,1.03,1.03,1.03,1.03,1.03,1.03,1.03,1.03,1.03,1.03,1.03,1.03,1.03,1.03,1.03,1.03,1.03,1.03,1.03,1.03,1.03,1.03,1.03,1.03,1.03,1.03,1.03,1.03,1.03,1.03,1.03,1.03,1.03,1.03,1.03,1.03,1.03,1.03,1.03,1.03,1.03,1.03,1.03,1.03,1.03	300	200	250
14	19	4.88	4.00	7.50	1.03,1.03,1.03,1.03,1.03,1.03,1.03,1.03,1.03,1.03,1.03,1.03,1.03,1.03,1.03,1.03,1.03,1.03,1.03,1.03,1.03,1.03,1.03,1.03,1.03,1.03,1.03,1.03,1.03,1.03,1.03,1.03,1.03,1.03,1.03,1.03,1.03,1.03,1.03,1.03,1.03,1.03,1.03,1.03,1.03,1.03,1.03,1.03,1.03,1.03,1.03	300	200	250
15	19	9.97	9.97	4.75	2.33,2.33,2.33,2.33,2.33,2.33,2.33,2.33,2.33,2.33,2.33,2.33,2.33,2.33,2.33,2.33,2.33,2.33,2.33,2.33,2.33,2.33,2.33,2.33,2.33,2.33,2.33,2.33,2.33,2.33,2.33,2.33,2.33,2.33,2.33,2.33,2.33,2.33,2.33,2.33,2.33,2.33,2.33,2.33,2.33,2.33,2.33,2.33,2.33,2.33,2.33	300	200	250
16	19	9.97	9.97	4.75	2.33,2.33,2.33,2.33,2.33,2.33,2.33,2.33,2.33,2.33,2.33,2.33,2.33,2.33,2.33,2.33,2.33,2.33,2.33,2.33,2.33,2.33,2.33,2.33,2.33,2.33,2.33,2.33,2.33,2.33,2.33,2.33,2.33,2.33,2.33,2.33,2.33,2.33,2.33,2.33,2.33,2.33,2.33,2.33,2.33,2.33,2.33,2.33,2.33,2.33,2.33	300	200	250

Member Design Capacity

Member ID	$\Phi_t P_n$ (kip)	$\Phi_c P_n$ (kip)	$\Phi_b M_{zn}$ (k-ft)	$\Phi_b M_{yn}$ (k-ft)	$\Phi_v V_{yn}$ (kip)	$\Phi_v V_{zn}$ (kip)
1	377.97	356.08	83.29	83.29	113.39	113.39
2	198.33	196.72	21.95	21.95	59.50	59.50
3	116.10	115.41	15.79	11.10	42.08	23.28
4	116.10	111.33	15.79	11.10	42.08	23.28
5	116.10	114.33	15.79	11.10	42.08	23.28

5	116.10	114.23	15.79	11.10	42.08	23.28
6	116.10	115.41	15.79	11.10	42.08	23.28
7	116.10	114.23	15.79	11.10	42.08	23.28
8	133.20	32.95	32.87	6.12	40.24	43.62
9	66.48	58.89	3.82	3.82	19.94	19.94
10	116.10	111.33	15.79	11.10	42.08	23.28
11	133.20	32.95	32.87	6.12	40.24	43.62
12	198.33	196.72	21.95	21.95	59.50	59.50
13	133.20	85.85	23.66	6.12	40.24	43.62
14	133.20	85.85	23.64	6.12	40.24	43.62
15	133.20	32.95	32.87	6.12	40.24	43.62
16	133.20	32.95	32.87	6.12	40.24	43.62

Design Ratio

Member ID	P	M_z	M_y	V_y	V_z	(P,M_z,M_y)	Worst LC	KL/r	δ	Status
1	0.016	0.500	0.000	0.034	0.000	0.509	#13	0.143	Not Required	Pass
2	0.002	0.206	0.172	0.046	0.032	0.378	#13	0.035	Not Required	Pass
3	0.004	0.379	0.023	0.038	0.002	0.400	#13	0.045	Not Required	Pass
4	0.004	0.377	0.079	0.038	0.016	0.421	#13	0.080	Not Required	Pass
5	0.004	0.234	0.082	0.038	0.021	0.253	#13	0.074	Not Required	Pass
6	0.004	0.379	0.023	0.038	0.002	0.400	#13	0.045	Not Required	Pass
7	0.004	0.235	0.082	0.038	0.021	0.253	#13	0.074	Not Required	Pass
8	0.000	0.063	0.101	0.022	0.006	0.148	#13	Not Required	Not Required	Pass
9	0.008	0.027	0.036	0.001	0.000	0.066	#13	0.204	Not Required	Pass
10	0.004	0.377	0.079	0.038	0.016	0.421	#13	0.080	Not Required	Pass
11	0.000	0.063	0.101	0.022	0.006	0.148	#13	Not Required	Not Required	Pass
12	0.002	0.206	0.172	0.046	0.032	0.378	#13	0.035	Not Required	Pass
13	0.004	0.173	0.189	0.030	0.008	0.323	#13	0.190	Not Required	Pass
14	0.004	0.176	0.189	0.030	0.008	0.323	#13	0.286	Not Required	Pass
15	0.000	0.063	0.101	0.022	0.006	0.148	#13	Not Required	Not Required	Pass
16	0.000	0.063	0.101	0.022	0.006	0.148	#13	Not Required	Not Required	Pass

Definitions

Φ_t	Safety factor for tensile
Φ_c	Safety factor for compression
Φ_b	Safety factor for flexure
Φ_v	Safety factor for shear
E	Modulus of elasticity
F_y	Specified minimum yield stress
F_u	Specified minimum tensile strength
A	Cross-sectional area
J	Torsional constant
I_{yp}	Moment of inertia about the Y axes
I_{zp}	Moment of inertia about the Z axes
I_w	Warping constant
S_{yp}	Plastic section modulus about the Y axis
S_{zp}	Plastic section modulus about the Z axis
KL	Effective length
C_b	Buckling modification factor (from all load combinations)
L_b	Length between braced points
LST	Limited slenderness for tension
LSC	Limited slenderness for compression
LD	Limited deflection
P_n	Nominal axial strength (tension/comression)
M_n	Nominal flexural strength (about Z/Y axis)

V_n	Nominal shear strength (along Z/Y axis)
P	Design ratio in case of axial force
M_z	Design ratio in case of bending about Z axis
M_y	Design ratio in case of bending about Y axis
V_y	Design ratio in case of shear along Y axis
V_z	Design ratio in case of shear along Z axis
(P,M_z,M_y)	Design ratio in case of axial force and bending action
KL/r	Design ratio in case of section slenderness
δ	Design ratio in case of member deflection
OK	Capacity is provided
NG	Capacity is not provided

IBC 2018 Pile Design

Powered by SkyCiv

Input	Description
Region	American Standard
Concrete design code	American Concrete Institute (ACI 318:2019)

Cross-section

Input	Description	Value
Shape	Cross-sectional shape	Round
D	Section diameter	36 in

Material Properties

Input	Description	Value
f'_{ck}	Concrete compressive strength	2.5 ksi
f_{yk}	Yield strength of steel	60 ksi
d_b	Rebar diameter	#5 (0.625) in
cover	Concrete cover	3 in

Soil Parameters (IBC 1806)

Input	Description	Value
Soil type	Sand, silty sand, clayey sand, silty gravel & clayey gravel	
q_a	Allowable bearing pressure	2000 psf
R	Allowable lateral pressure	150 psf/ft

Loading

Load	ASD	LRFD
P	3.98 kip	5.851 kip
Vx	-2.286 kip	-3.809 kip
Vz	0 kip	0 kip
Mx	0 kip-ft	0 kip-ft
Mz	24.88 kip-ft	41.68 kip-ft

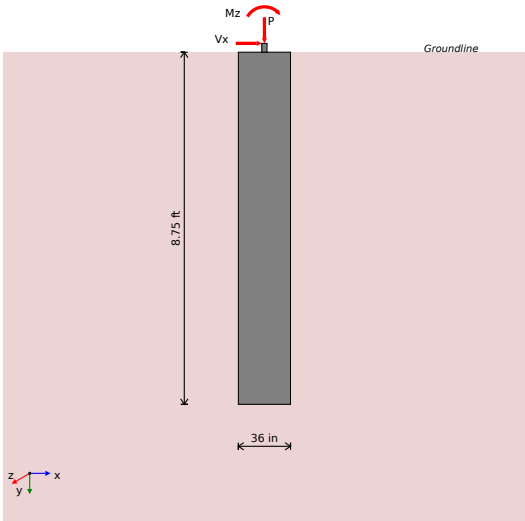

Required depth to resist lateral loads (ASD)

Allowable lateral pressure $R =$ 150 psf/ft

Point of application of lateral load:

$$H = h_1 + h_2 + h_e = 0 + 0 + 0 = 0\ ft$$

Considering x-direction:

Lateral force per section length

$$H_o = \frac{V_x}{D} = \frac{-2.286}{36} = -0.762\ \frac{kip}{ft}$$

Moment per section length

$$M_o = \frac{M_z + (V_x \times H)}{D} = \frac{24.88 + (-2.286 \times 0)}{36} = 8.294\ \frac{kip - ft}{ft}$$

$$M_o = \frac{\quad}{D} = \frac{\quad}{36} = 8.294 \frac{\quad}{ft}$$

Required depth of embedment in earth:

$$L_x^3 - \left(14.14 \times \frac{H_o \times L_x}{R}\right) - \left(18.85 \times \frac{M_o}{R}\right) = 0$$

Solving the cubic equation:

$$L_{e,x} = 7.83\ ft$$

Considering z-direction:

Since there are no loads applied in this direction, the required effective length: $L_{e,z}$ = 0 ft.

Minimum embedded depth

Depth of pile required

$$L_{e,req} = MAX[L_{e,x}, L_{e,z}] = MAX[7.83, 0] = 7.83\ ft$$

Actual embedded length

$$L_e = L - h_2 - h_e = 8.75 - 0 - 0 = 8.75\ ft$$

Utilisation

$$Ratio = \frac{L_{e,req}}{L_e} = \frac{7.83}{8.75} = 0.895$$

UTILITY: 0.89

REFERENCES	CALCULATIONS	RESULTS

End-bearing Capacity (ASD)

Allowable bearing pressure	$q_a =$	2000 psf
Unit weight of concrete	$w_c =$	0.15 kip/ft^3

Cross-sectional area:

$$A = \frac{\pi \times D^2}{4} = \frac{\pi \times 36^2}{4} = 7.069\ ft^2$$

End-bearing pressure:

$$q = \frac{P}{A} = \frac{3.98}{7.069} = 563\ psf$$

Utilisation

$$Ratio = \frac{q}{q_a} = \frac{563}{2000} = 0.282$$

UTILITY: 0.28

Lateral Soil Pressure (ASD)

Allowable lateral pressure	$R =$	150 psf/ft

Length to least lateral dimension ratio:

$$\frac{L}{D} = \frac{8.75}{3} = 2.917$$

L/D ratio ≤ 10. This pile is classified as a short pile.

Considering x-direction:

Distance from resting surface to pivot point:

$$a = \frac{(4 \times M_o \times L_e) + (3 \times H_o \times L_e^2)}{(6 \times M_o) + (4 \times H_o \times L_e)}$$

$$a = \frac{(4 \times 8.294 \times 8.75) + (3 \times 0.762 \times 8.75^2)}{(6 \times 8.294) + (4 \times 0.762 \times 8.75)} = 6.088\ ft$$

Earth pressure against the pile at a distance a/2 from the resting surface:

$$p = \frac{1.178 \times [(4 \times M_o) + (3 \times H_o \times L_e)]^2}{L_e^2 \times [(3 \times M_o) + (2 \times H_o \times L_e)]}$$

$$p = \frac{1.178 \times [(4 \times 8.294) + (3 \times -0.762 \times 8.75)]^2}{8.75^2 \times [(3 \times 8.294) + (2 \times -0.762 \times 8.75)]} = 0.231\ \frac{kip}{ft^2}$$

Allowable lateral soil pressure at a depth of a/2:

$$p_a = R \times \frac{a}{2} = 0.15 \times \frac{6.088}{2} = 0.457\,\frac{kip}{ft^2}$$

Utilisation - pressure at a depth of a/2

$$Ratio = \frac{p}{p_a} = \frac{0.231}{0.457} = 0.507$$

UTILITY: 0.51

Earth pressure against the pile at distance L_e:

$$s = \frac{9.425 \times [(2 \times M_o) + (H_o \times L_e)]}{L_e^2} = \frac{9.425 \times [(2 \times 8.294) + (-0.762 \times 8.75)]}{8.75^2} = 1.221\,\frac{kip}{ft^2}$$

Allowable lateral soil pressure at a depth of L_e:

$$p_s = R \times L_e = 0.15 \times 8.75 = 1.313\,\frac{kip}{ft^2}$$

Utilisation - pressure at a depth of L_e

$$Ratio = \frac{s}{p_s} = \frac{1.221}{1.313} = 0.931$$

UTILITY: 0.93

Considering z-direction:

Since no loads are applied in this direction, lateral soil pressure check is not required.

REFERENCES	CALCULATIONS	RESULTS

Shear force and bending moment (LRFD)

Considering x-direction:

Lateral force per section length

$$H_o = \frac{V_x}{D} = \frac{-3.809}{36} = -1.27\,\frac{kip}{ft}$$

Moment per section length

$$M_o = \frac{M_z + (V_x \times H)}{D} = \frac{41.68 + (-3.809 \times 0)}{36} = 13.89\,\frac{kip - ft}{ft}$$

Distance from resting surface to pivot point:

$$a = \frac{(4 \times M_o \times L_e) + \left(3 \times H_o \times L_e^2\right)}{(6 \times M_o) + (4 \times H_o \times L_e)}$$

$$a = \frac{(4 \times 13.89 \times 8.75) + \left(3 \times 1.27 \times 8.75^2\right)}{(6 \times 13.89) + (4 \times 1.27 \times 8.75)} = 6.087\,ft$$

Max shear force located at depth a:

$$E = \frac{M_o}{H_o} = \frac{13.89}{-1.27} = 10.94\,ft$$

$$V_{max,x} = (H_o \times D) \times [1 - [3 \times \left(\frac{4 \times E}{L_e} + 3\right) \times \left(\frac{a}{L_e}\right)^2] + [4 \times \left(\frac{3 \times E}{L_e} + 2\right) \times \left(\frac{a}{L_e}\right)^3]]$$

$$V_{max,x} = (-1.27 \times 36) \times [1 - [3 \times \left(\frac{4 \times 10.94}{8.75} + 3\right) \times \left(\frac{6.087}{8.75}\right)^2] + [4 \times \left(\frac{3 \times 10.94}{8.75} + 2\right) \times \left(\frac{6.087}{8.75}\right)^3]]$$

$$V_{max,x} = 10.94\,kip$$

Max bending moment located at a depth of a/2:

$$M_{max,x} = (H_o \times D \times L_e) \times [\left(\frac{E}{L_e} + \frac{a}{2 \times L_e}\right) - [\left(\frac{4 \times E}{L_e} + 3\right) \times \left(\frac{a}{2 \times L_e}\right)^3] + [\left(\frac{3 \times E}{L_e} + 2\right) \times \left(\frac{a}{2 \times L_e}\right)^4]]$$

$$M_{max,x} = (-1.27 \times 36 \times 8.75) \times [\left(\frac{10.94}{8.75} + \frac{6.087}{2 \times 8.75}\right) - [\left(\frac{4 \times 10.94}{8.75} + 3\right) \times \left(\frac{6.087}{2 \times 8.75}\right)^3] + [\left(\frac{3 \times 10.94}{8.75} + 2\right) \times \left(\frac{6.087}{2 \times 8.75}\right)^4]]$$

$$M_{max,x} = 44.85\,kip - ft$$

Considering z-direction:

There are no loads applied in this direction.

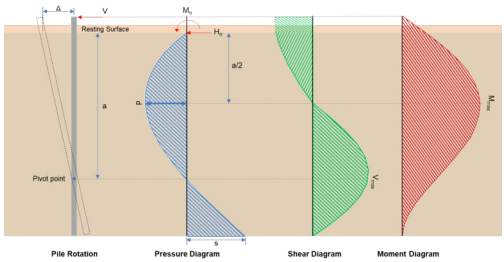

Minimum Reinforcement Check (LRFD)

Gross area of concrete:

$$A_g = \frac{\pi \times D^2}{4} = \frac{\pi \times 36^2}{4} = 1018\ in^2$$

Main Reinforcement

22.4.2.2 Required reinforcement:

$$A_{st,req} = \frac{P - (0.85 \times f'_{ck} \times A_g)}{f_{yk} - (0.85 \times f'_{ck})} = \frac{5.851 - (0.85 \times 2.5 \times 1018)}{60 - (0.85 \times 2.5)} = -37.27\ in^2$$

10.6.1.1 Maximum reinforcement:

$$A_{st,max} = 0.08 \times A_g = 0.08 \times 1018 = 81.43 in^2$$

7.6.1.1 Minimum reinforcement:

$$A_{st,min} = 0.0018 \times A_g = 0.0018 \times 1018 = 1.832 in^2$$

Governing minimum reinforcement area:

$$(0.0018 \times A_g) \leq A_{st,req} \leq (0.08 \times A_g)$$

$$A_{min} = 1.832\ in^2$$

Minimum number of reinforcements:

$$A_{bar} = 0.307\ in^2$$

$$n_{min} = \frac{A_{min}}{A_{bar}} = \frac{1.832}{0.307} = 6$$

25.2.3 Minimum spacing:

$$s_{rebar} = MAX[1.5, 1.5 \times d_b] = MAX[1.5, (1.5 \times 0.625)] = 1.5\ in$$

$$\text{Use: } n = 6\text{pcs at } 1.5 \text{ in minimum spacing}$$

Total reinforcement area:

$$A_{st} = 6 \times 0.307 = 1.841\ in^2$$

Shear Reinforcement

25.7.2.2 For main reinforcement $\leq$ 1.41 in: Use #3(0.375 in)

Maximum spacing of shear Reinforcements:

$$s = MIN[16 \times d_b, 48 \times d_{b,ties}, D] = MIN[(16 \times 0.625), (48 \times 0.375), 36] = 10\ in$$

Detailing Summary	
Main reinforcement	#5 (0.625 in) - 6pcs at 1.5 in min. spacing
Shear reinforcement	#3 (0.375 in) at 10 in max. spacing

Axial Compression Strength (LRFD)

22.4.2.2 Allowable axial compressive strength:

$$\phi P_N = \phi \times 0.85 \times [(0.85 \times f'_{ck} \times [A_g - A_{st}]) + (f_{yk} \times A_{st})]$$

$$\phi P_N = 0.65 \times 0.85 \times [(0.85 \times 2.5 \times [1018 - 1.841]) + (60 \times 1.841)] = 1254\ kip$$

Utilisation

$$Ratio = \frac{P}{\phi P_N} = \frac{5.851}{1254} = 0.005$$

$$Ratio = \frac{}{\phi P_N} = \frac{}{1254} = 0.00$$

UTILITY: 0.00

Shear Strength LRFD)

Effective shear width	$b_w =$	36 in
Effective shear depth	$d =$	28.8 in
Shear reinforcement area	$A_v =$	0.221 in^2
Shear reinforcement spacing	$s =$	10 in
Concrete type factor (Normal concrete)	$\lambda =$	1
Strength reduction factor for shear	$\phi =$	0.75
Maximum shear in the x-direction	$V_{max,x} =$	10.94 kip
Maximum shear in the z-direction	$V_{max,z} =$	0 kip

22.5.5.1.1 Max shear strength of concrete:

$$V_{c,max} = 5 \times \lambda \times \sqrt{f'_{ck}} \times b_w \times d = 5 \times 1 \times \sqrt{2.5} \times 36 \times 28.8 = 259.2\ kip$$

Table 22.5.5.1 Shear strength of concrete:

$$V_{c,a} = \left(2 \times \lambda \times \sqrt{f'_{ck}} + MIN[\frac{P}{6 \times A_g}, (0.05 \times f'_{ck})]\right) \times (b_w \times d)$$

$$V_{c,a} = \left(2 \times 1 \times \sqrt{2.5} + MIN[\frac{5.851}{6 \times 1018}, (0.05 \times 2.5)]\right) \times (36 \times 28.8) = 104.7\ kip$$

Governing shear strength of concrete:

$$V_c = MIN[V_{c,max}, V_{c,a}] = MIN[259.2, 104.7] = 104.7\ kip$$

22.5.1.2 Shear strength of steel (a):

$$V_{s,a} = 8 \times \sqrt{f'_{ck}} \times b_w \times d = 8 \times \sqrt{2.5} \times 36 \times 28.8 = 414.7\ kip$$

22.5.8.5.3 Shear strength of steel (b):

$$V_{s,b} = \frac{A_v \times f_{yk} \times d}{s} = \frac{0.221 \times 60 \times 28.8}{10} = 38.17\ kip$$

Governing shear strength of steel:

$$V_s = MIN[V_{s,a}, V_{s,b}] = MIN[414.7, 38.17] = 38.17\ kip$$

22.5.1.1 Allowable shear strength:

$$\phi V_n = \phi \times (V_c + V_s) = 0.75 \times (104.7 + 38.17) = 107.1\ kip$$

$$V_{max} = MAX[10.94, 0] = 10.94\ kip$$

Utilisation

$$Ratio = \frac{V_{max}}{\phi V_n} = \frac{10.94}{107.1} = 0.102$$

UTILITY: 0.10

Flexural Strength (LRFD)

Concrete type factor (Normal concrete)	$\lambda =$	1
Strength reduction factor for flexure	$\phi =$	0.65
Modulus of steel reinforcement	$E_s =$	200e3 ksi
Maximum concrete strain	$\varepsilon_c =$	0.0030
Yield strain of steel f_y/E_s	$\varepsilon_y =$	0.0003
Section width	$b =$	36 in
Distance to the compression rebar	$d_s =$	3.688 in
Distance to the tension rebar	$d =$	28.8 in
Total bar area	$A_s =$	1.841 in^2
Maximum applied axial load	$P =$	5.851 kip
Maximum moment in the x-direction	$M_{max,x} =$	44.85 kip-ft
Maximum moment in the z-direction	$M_{max,z} =$	0 kip-ft

Compressive force due to concrete:

$$\beta_1 = 0.85$$

$$C_{rc} = \beta_1 \times f'_c \times A_c$$

$$A_c = \frac{h^2}{8} \times (\theta - sin\theta)$$

$$\theta = \text{Central angle of the compressive area in radians}$$

Compressive force due to bars in compression:

$$C_{rs} = f_1 \times A_{sc}$$

$$\varepsilon_1 = (c - d_s) \times \frac{\varepsilon_c}{c}$$

$$f_1 = E_s \times \varepsilon_1 \ (\varepsilon_1 < \varepsilon_{sy}), \ f_1 = f_y \ (\varepsilon_1 \geq \varepsilon_{sy})$$

Tensile force due to bars in tension:

$$T_{rs} = f_2 \times A_{st}$$

$$\varepsilon_2 = (d - c) \times \frac{\varepsilon_{cu}}{c}$$

$$f_2 = E_s \times \varepsilon_2 \ (\varepsilon_2 < \varepsilon_{sy}), \ f_2 = \phi_s \times f_y \ (\varepsilon_2 \geq \varepsilon_{sy})$$

Interaction Diagram Summary

Point	Case	M_r	P_r
P1	Pure Tension	0	-99.4
P2	Pure Bending	131.5	0
P3	Balanced Failure	474.1	1108
P4	Decompression	419.7	1230
P5	Compression Limit	398.3	1254
P6	Pure Compression	0	1254

Uniaxial Bending Check

$$M_f = \sqrt{M_{max,x}^2 + M_{max,z}^2} = \sqrt{44.85^2 + 0^2} = 44.85 \ kip - ft$$

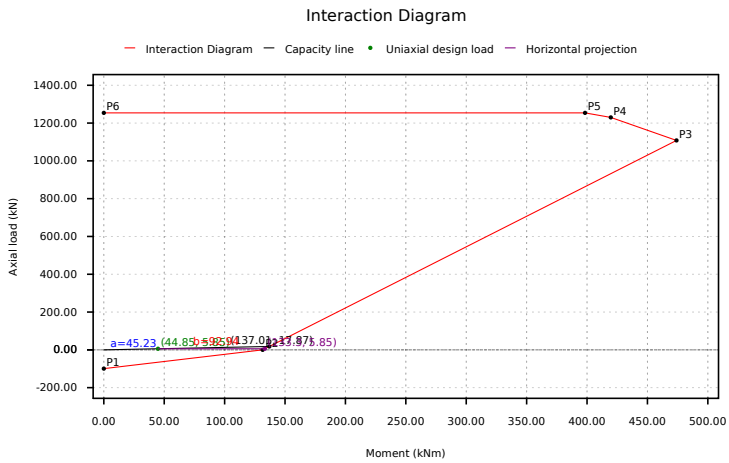

Segment	Signed Distance
P1 - P2	56.91
P2 - P3	84.5
P3 - P4	841.3
P4 - P5	1093
P5 - P6	1248
Status	PASS: Point lies inside the curve

Utilisation

$$Ratio = \frac{a}{a+b} = \frac{45.23}{45.23 + 92.94} = 0.327$$

UTILITY: 0.33

REFERENCES	CALCULATIONS	RESULTS

Results Summary

Result Name	Results
PILE DETAILS	
Length of the pile	8.75 ft
Dimension	36Ø in
Main bar reinforcement	#5-6pcs at 1.5 in min.
Shear reinforcement	#3 at 10 in max.
UTILISATIONS	
Required depth	0.89
End-bearing capacity	0.28
p_a	0.51

p_s	0.93
Axial compression strength	0.00
Shear strength	0.10
Uniaxial bending strength	0.33