Your Project Calculations

Project Name: MTSOLAR_AH0AJ66I73G9-JB-RevA

S3D Model Link:
https://platform.skyciv.com/structural?preload_name=MTSOLAR_AH0AJ66I73G9-JB-RevA&preload_path=Shared%20Enterprise%20Folder/MT_Solar_Projects/8_2023

Public Model Link:
https://platform.skyciv.com/structural-viewer?project_id=OR0CzOvQ1qOhcE4EorDVlQXIhvdreTLYdt8gZHy5CBB0cnvAy4bHKiYuFZ0hlLAC

Array Specification

Product:	Beam
Unique ID:	1P-0-8TOP-XD-84-L-5Hx4W-2153
Duty Classification:	XD
Module Width:	40.00 in
Module Length:	65.00in
Number of Rows:	5
Number of Columns:	4
Total Number of Modules:	20
Desired Tilt Angle:	15
Front Edge Clearance:	5
Total Array Height at Tilt:	9.34 ft
Total Frame Length:	21.50 ft
Frame Weight:	994 lbs
Array Dimensions N/S:	16.88 ft
Array Dimensions E/W:	22.00 ft
Rail Length:	202.50 in
Rail Spacing:	2.71 ft
Rail Check:	Not Checked

Support Specifications

Pole Size:	8in Pipe Sch 40
Pole Length above Grade:	7.18 ft
Number of Poles:	1
Pole Spacing:	0

Foundation Specifications

Foundation Type:	Square
Foundation Dimensions:	48 x 48 in
Foundation Depth (below grade):	Pile 1: 7.00 ft
Foundation Volume:	4.148 y^3
Foundation Result:	PASSED
Mount Twist:	0.000001 kip

Site Info

Risk Category:	I
Exposure:	C
Soil Classification:	sand
Site Location:	Waimea, HI 96743, USA
Wind Speed:	140 mph
Snow Load:	0 psf
Design Uplift Pressure:	Multiple pressures
Design Downforce Pressure:	Multiple pressures
Design Snow Pressure:	0.000000 ksf

Design Disclaimer

This software should be used for preliminary designs and should not be used as a final design unless reviewed, verified and designed by a qualified structural engineer.

AutoDesigner Input


```
{"wind_speed_override":140,"snow_load_override":0,"direct_snow_load":false,"product_type":"Beam","project_id":"MTSOLAR_AH0AJ66I73G9-JB-RevA","site_address":"Waimea, HI 96743,
USA","module_width":40,"module_length":65,"number_rows":"5","number_columns":4,"pole_mount_section":"4_40","core_pipe_width":65,
"core_pipe_section":"2_40","adjuster_section":"2_40","core_beam_height":65,"core_beam_section":"HSS3x2x1/8","main_pipe_section":
"2_12GA","pole_spacing":"15","tilt_angle":15,"ground_clearance":5,"risk_category":"I","exposure_category":"C","frame_duty_overri
de":"XD","pole_override":"8_40","soil_type":"sand","customer_foundation_override":"48_Square","foundation_type":"Square","founda
tion_size":48,"check_rails":false}
```


Design Notes:

- AISC Deflection checks are set to L/1 due to structure design intent

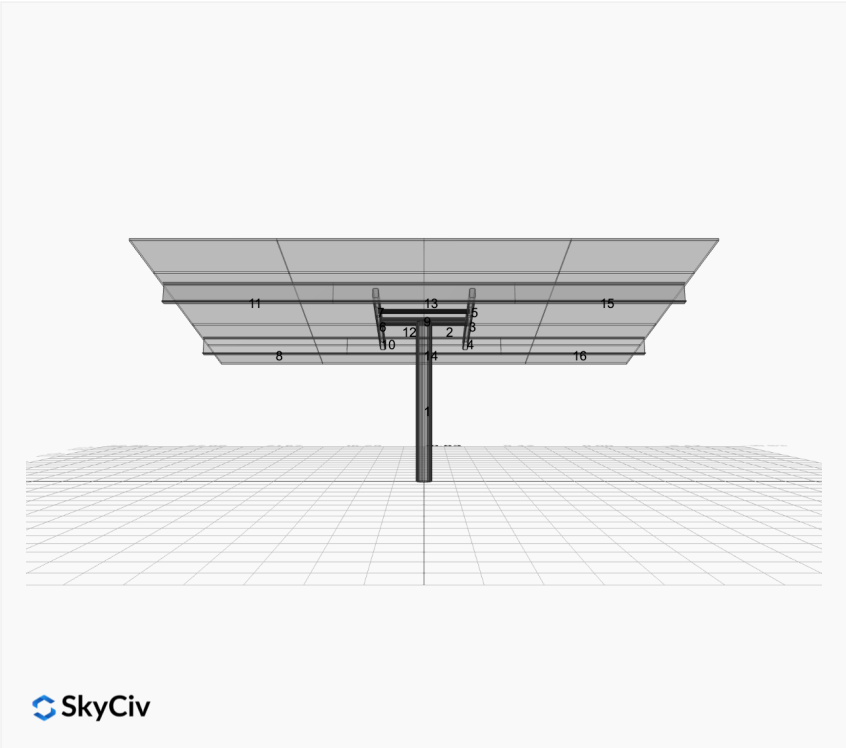

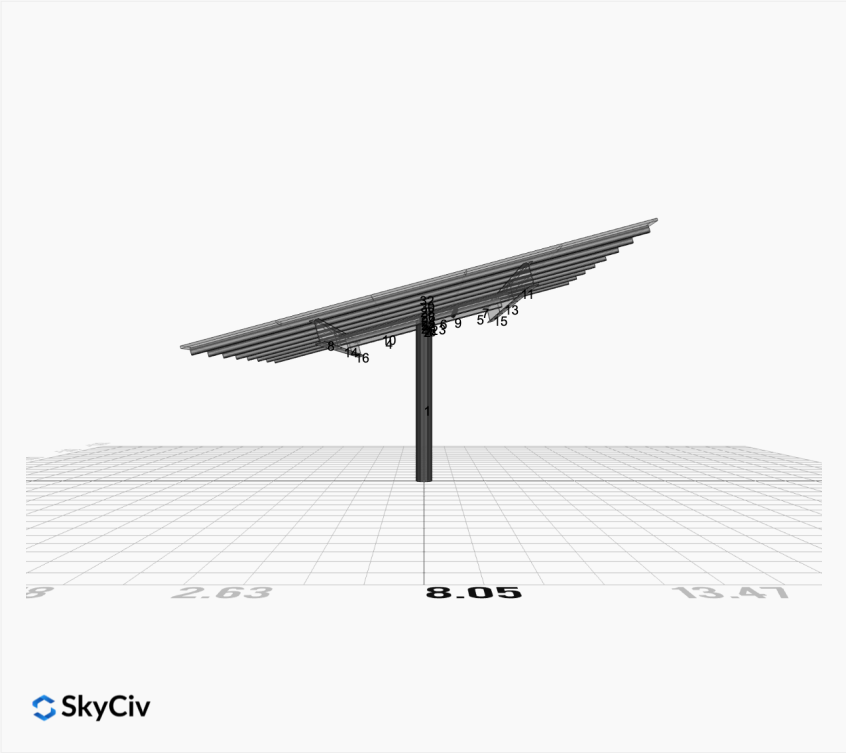
2.63
8.05
13.47
SkyCiv

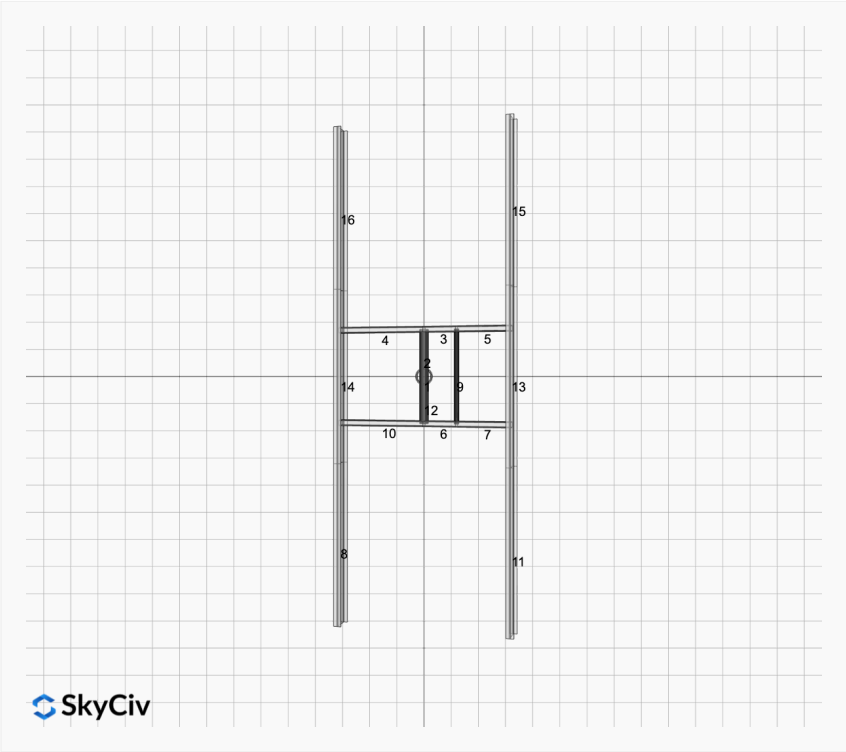
16
15
4
3
5
2
14
9
13
12
10
6
7
8
11
SkyCiv

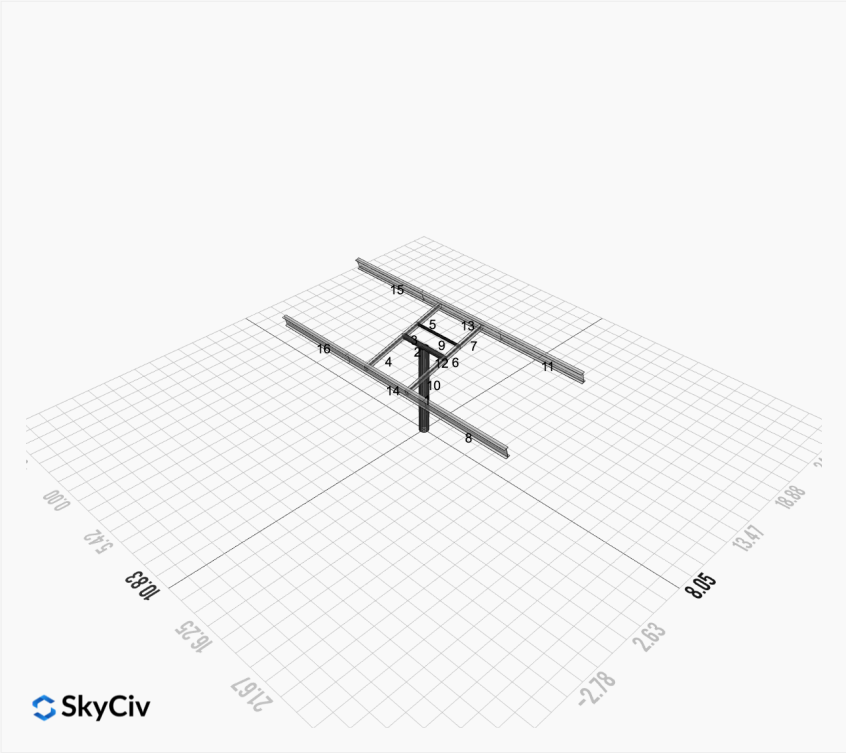
SkyCiv

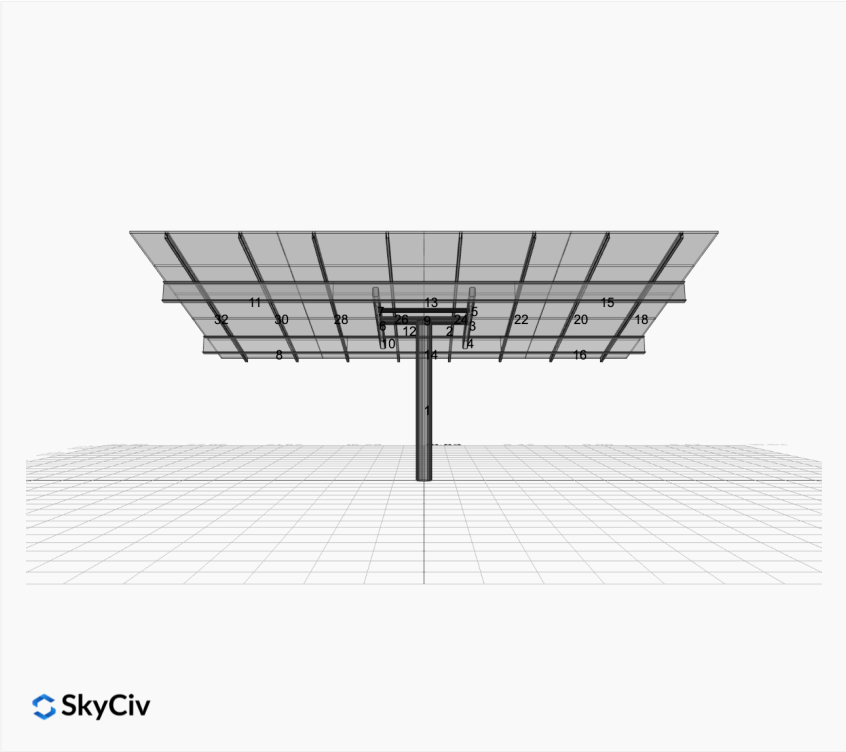
SkyCiv

FEM Results (Envelope Worst Case for each member)

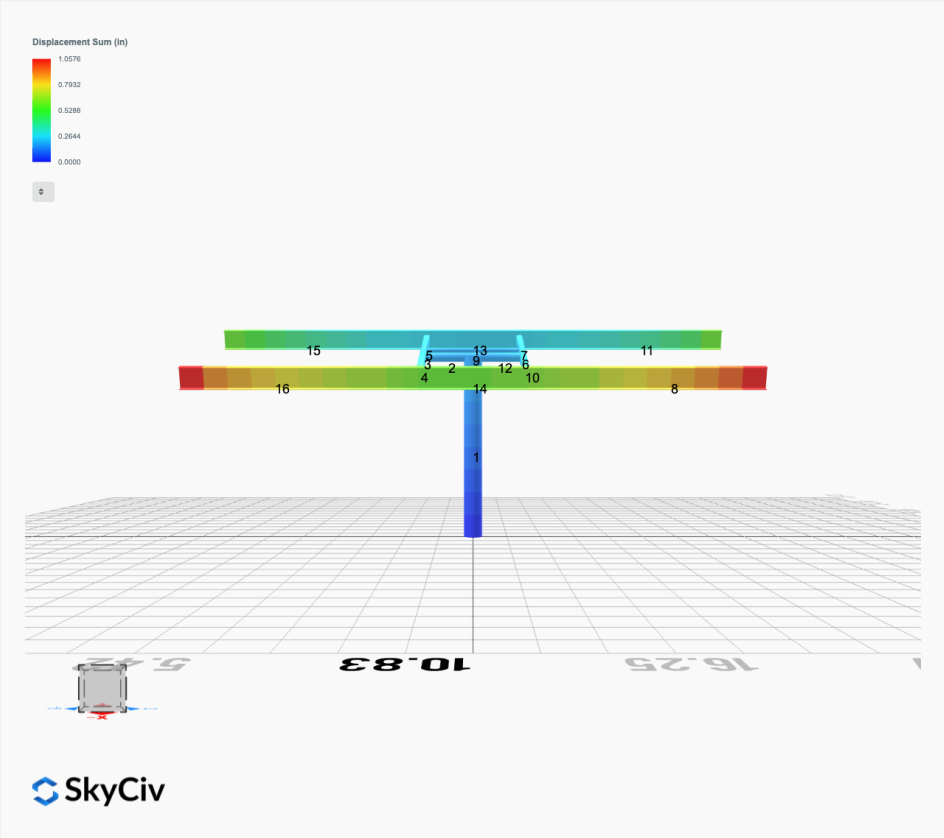

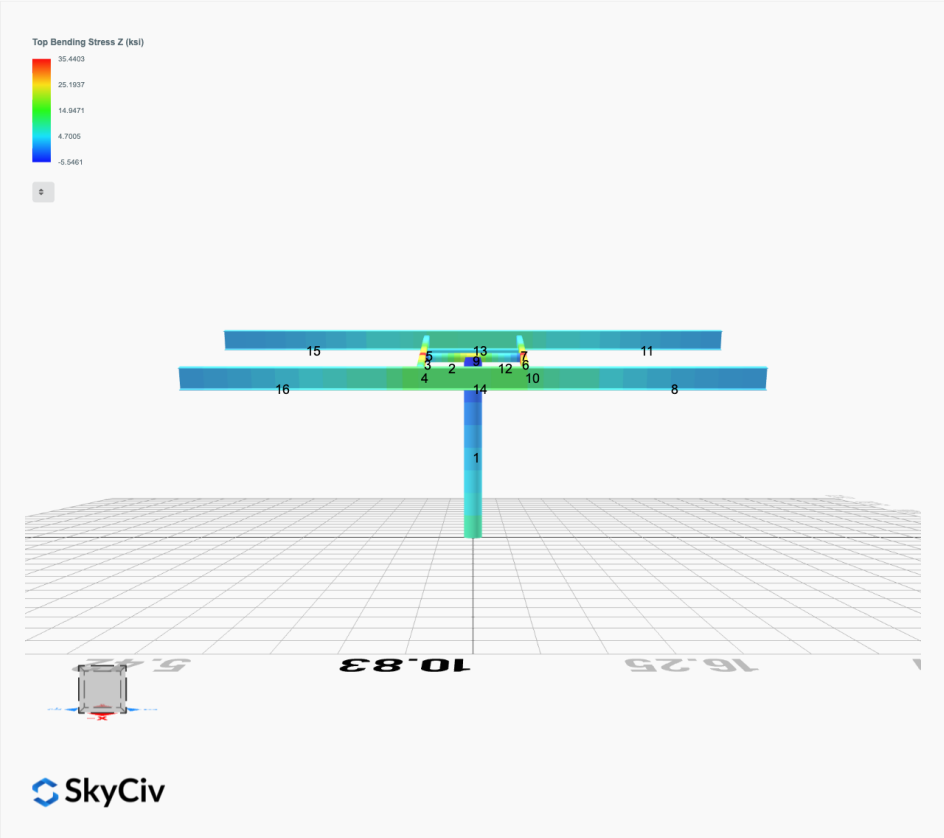

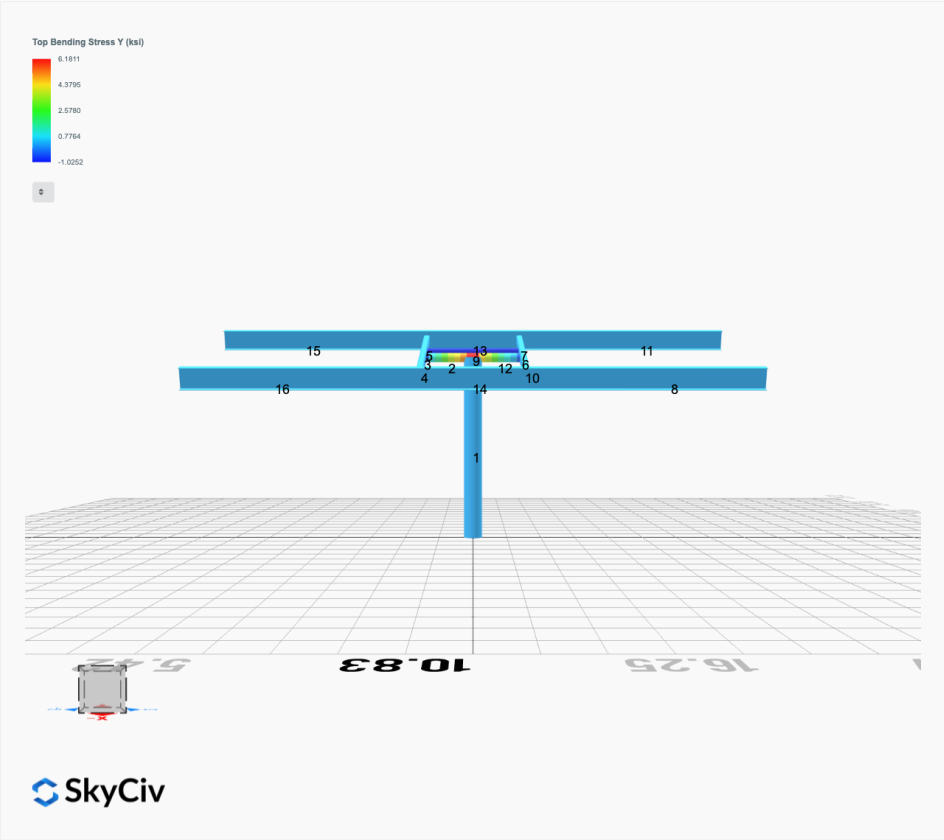
Top Bending Stress Y (ksi)
6.1811
4.3795
2.5780
0.7764
-1.0252
15
11
16
8
1
SkyCiv

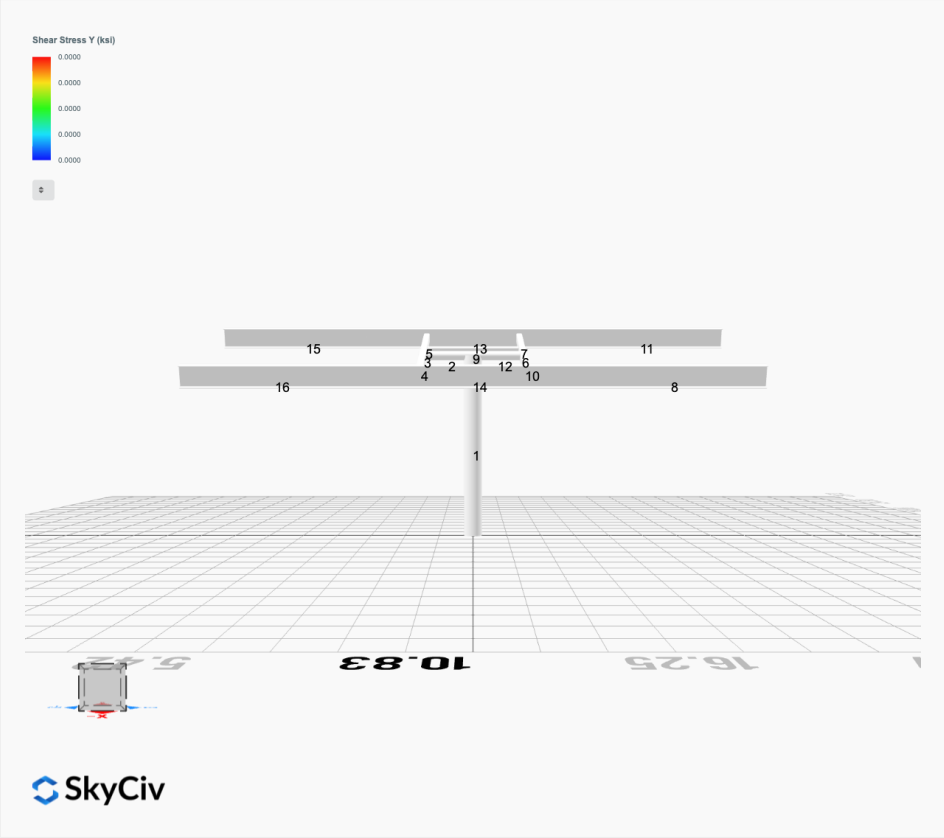
Shear Stress Y (ksi)
0.0000
0.0000
0.0000
0.0000
0.0000
15
11
16
8
1
SkyCiv

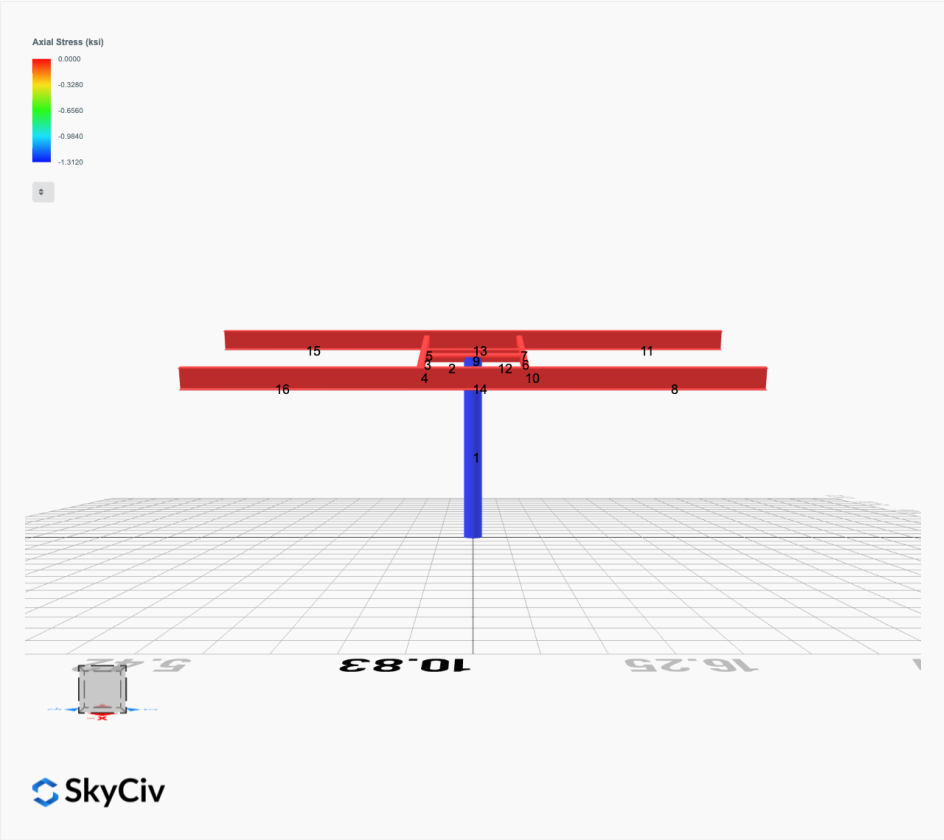
Axial Stress (ksi)
0.0000
-0.3280
-0.6560
-0.9840
-1.3120
15
13
11
5
9
7
3
2
12
6
4
10
16
14
8
1
10.83
SkyCiv

Reaction Forces for Foundation 1 (Node ID#1), (kip, kip-ft)

ASD Load Combination Results

Name	Fx	Fy	Fz	Mx	My	Mz
ULS: 1. D	0.0000	2.7189	-0.0000	0.0000	-0.0000	0.0328
ULS: 2. D + L	0.0000	2.7189	-0.0000	0.0000	-0.0000	0.0328
ULS: 3. D + (S or Lr or R)	0.0000	2.7189	-0.0000	0.0000	-0.0000	0.0328
ULS: 3. D + (S or Lr or R)	0.0000	2.7189	-0.0000	0.0000	-0.0000	0.0328
ULS: 4. D + 0.75L + 0.75(S or Lr or R)	0.0000	2.7189	-0.0000	0.0000	-0.0000	0.0328
ULS: 4. D + 0.75L + 0.75(S or Lr or R)	0.0000	2.7189	-0.0000	0.0000	-0.0000	0.0328
ULS: 5b. D + 0.7E	0.0000	2.7189	-0.0000	0.0000	-0.0000	0.0328
ULS: 6b. D + 0.75L + 0.75(0.7)E + 0.75S	0.0000	2.7189	-0.0000	0.0000	-0.0000	0.0328
ULS: 8. 0.6D + 0.7E	0.0000	1.6314	-0.0000	0.0000	-0.0000	0.0197
ULS: 5a. D + 0.6W_Wind downforce Case A only	-2.3354	11.4348	0.0000	0.0000	-0.0000	20.6953
ULS: 5a. D + 0.6W_Wind downforce Case B only	-2.3354	11.4348	0.0000	0.0000	-0.0000	20.6953
ULS: 5a. D + 0.6W_Wind uplift Case A only	1.7717	-3.8931	0.0000	0.0000	-0.0000	-7.9540
ULS: 5a. D + 0.6W_Wind uplift Case B only	1.5301	-2.9914	-0.0000	0.0000	-0.0000	-32.6389
ULS: 6a. D + 0.75L + 0.75(0.6)W + 0.75(S or Lr or R)_Wind downforce Case A only	-1.7515	9.2558	0.0000	0.0000	-0.0000	15.5297
ULS: 6a. D + 0.75L + 0.75(0.6)W + 0.75(S or Lr or R)_Wind downforce Case B only	-1.7515	9.2558	0.0000	0.0000	-0.0000	15.5297
ULS: 6a. D + 0.75L + 0.75(0.6)W + 0.75(S or Lr or R)_Wind uplift Case A only	1.3288	-2.2401	0.0000	0.0000	-0.0000	-5.9573
ULS: 6a. D + 0.75L + 0.75(0.6)W + 0.75(S or Lr or R)_Wind uplift Case B only	1.1476	-1.5638	-0.0000	0.0000	-0.0000	-24.4709
ULS: 6a. D + 0.75L + 0.75(0.6)W + 0.75(S or Lr or R)_Wind downforce Case A only	-1.7515	9.2558	0.0000	0.0000	-0.0000	15.5297
ULS: 6a. D + 0.75L + 0.75(0.6)W + 0.75(S or Lr or R)_Wind downforce Case B only	-1.7515	9.2558	0.0000	0.0000	-0.0000	15.5297
ULS: 6a. D + 0.75L + 0.75(0.6)W + 0.75(S or Lr or R)_Wind uplift Case A only	1.3288	-2.2401	0.0000	0.0000	-0.0000	-5.9573
ULS: 6a. D + 0.75L + 0.75(0.6)W + 0.75(S or Lr or R)_Wind uplift Case B only	1.1476	-1.5638	-0.0000	0.0000	-0.0000	-24.4709
ULS: 7. 0.6D + 0.6W_Wind downforce Case A only	-2.3354	10.3472	0.0000	0.0000	-0.0000	20.6822
ULS: 7. 0.6D + 0.6W_Wind downforce Case B only	-2.3354	10.3472	0.0000	0.0000	-0.0000	20.6822
ULS: 7. 0.6D + 0.6W_Wind uplift Case A only	1.7717	-4.9806	0.0000	0.0000	-0.0000	-7.9672
ULS: 7. 0.6D + 0.6W_Wind uplift Case B only	1.5301	-4.0790	-0.0000	0.0000	-0.0000	-32.6520

Worst Case Reactions LRFD

These calculations are taken directly from the FEA via SkyCiv and are used in the Concrete Checks of the Foundatino Module.
Note: Worst case values are assumed as downforce wind load cases.

Result	Value (kip, kip-ft)
Axial	17.7891
Shear X	-3.8923
Shear Z	-0.0000
Moment X	-0.0000
Moment Y (Twist)	0.0000
Moment Z	54.7040

Worst Case Reactions ASD

These results are taken from the worst case values in the above table and are used in the Soil Checks in the Foundation Module.
Note: Worst case values are assumed as downforce wind load cases.

Result	Value (kip, kip-ft)
Axial	11.4348
Shear X	-2.3354
Shear Z	-0.0000
Moment X	0.0000
Moment Y (Twist)	0.0000
Moment Z	32.6520

Project Details

Design Code:	AISC 360-16 LRFD
Provision:	LRFD
Country:	United States
User Name:	sales@mtsolar.us
Unit System:	imperial

Design Input Information

Design Factors			
Φ_t	Φ_c	Φ_b	Φ_v
0.9	0.9	0.9	0.9

Design Materials			
ID	E (ksi)	F_y (ksi)	F_u (ksi)
1	29000	50	65

Section Dimensions

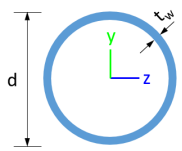

ID	Name	d (in)	t_w (in)					
3	2in Pipe Sch 120	2.38	0.25					
6	4in Pipe Sch 120	4.50	0.44					
9	8in Pipe Sch 40	8.63	0.32					

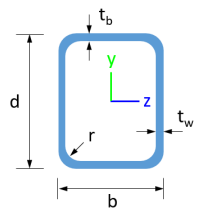

ID	Name	d (in)	b (in)	t_w (in)	t_b (in)	r (in)		
17	HSS5x3x1/4	5.00	3.00	0.23	0.23	0.23		

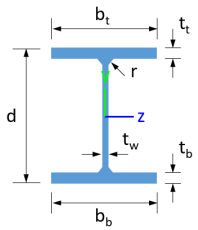

ID	Name	d (in)	t_w (in)	b_t (in)	b_b (in)	t_t (in)	t_b (in)	r (in)
20	W10x12	9.87	0.19	3.96	3.96	0.21	0.21	0.30

Section Properties

ID	Name	A (in^2)	J (in^4)	I_{yp} (in^4)	I_{zp} (in^4)	I_w (in^6)	S_{yp} (in^3)	S_{zp} (in^3)
3	2in Pipe Sch 120	1.67	1.91	0.96	0.96	0.00	1.13	1.13
6	4in Pipe Sch 120	5.58	23.29	11.64	11.64	0.00	7.24	7.24
9	8in Pipe Sch 40	8.40	144.98	72.49	72.49	0.00	22.21	22.21

17	HSS5x3x1/4	3.37	11.00	4.81	10.70	62.42	3.77	5.38
20	W10x12	3.54	0.05	2.18	53.80	50.90	1.74	12.60

Member Properties								
Member ID	Section ID	K_zL (ft)	K_yL (ft)	L_b (ft)	C_b	LST	LSC	LD
1	9	15.09	15.09	7.18	-	300	200	1
2	6	1.30	1.30	2.00	-	300	200	1
3	17	0.92	0.92	1.42	1.19,1.19,1.19,1.19,1.19,1.19,1.18,1.18,1.17,1.18,1.18,1.18,1.17,1.18,1.18,1.18,1.17,1.17,1.18,1.18,1.17,1.17,1.18,1.18,1.18,1.18	300	200	1
4	17	2.44	2.44	3.75	1.68,1.68,1.68,1.68,1.68,1.68,1.67,1.67,1.66,1.68,1.67,1.67,1.66,1.68,1.67,1.67,1.66,1.68,1.67,1.67,1.66,1.68,1.67,1.67,1.66,1.68	300	200	1
5	17	1.52	1.52	2.33	1.68,1.68,1.68,1.68,1.68,1.68,1.67,1.67,1.66,1.66,1.67,1.67,1.66,1.66,1.67,1.67,1.65,1.66,1.67,1.67,1.65,1.66,1.67,1.67,1.66,1.67	300	200	1
6	17	0.92	0.92	1.42	1.19,1.19,1.19,1.19,1.19,1.19,1.18,1.18,1.17,1.18,1.18,1.18,1.17,1.18,1.18,1.18,1.17,1.17,1.18,1.18,1.17,1.17,1.18,1.18,1.18,1.18	300	200	1
7	17	1.52	1.52	2.33	1.68,1.68,1.68,1.68,1.68,1.68,1.67,1.67,1.66,1.66,1.67,1.67,1.66,1.66,1.67,1.67,1.65,1.66,1.67,1.67,1.65,1.66,1.67,1.67,1.66,1.67	300	200	1
8	20	14.70	14.70	7.00	2.33,2.33,2.33,2.33,2.33,2.33,2.33,2.33,2.33,2.33,2.33,2.33,2.33,2.33,2.33,2.33,2.33,2.33,2.33,2.33,2.33,2.33,2.33,2.33,2.33,2.33	300	200	1
9	3	2.60	2.60	4.00	-	300	200	1
10	17	2.44	2.44	3.75	1.68,1.68,1.68,1.68,1.68,1.68,1.67,1.67,1.66,1.68,1.67,1.67,1.66,1.68,1.67,1.67,1.66,1.68,1.67,1.67,1.66,1.68,1.67,1.67,1.66,1.68	300	200	1
11	20	14.70	14.70	7.00	2.33,2.33,2.33,2.33,2.33,2.33,2.33,2.33,2.33,2.33,2.33,2.33,2.33,2.33,2.33,2.33,2.33,2.33,2.33,2.33,2.33,2.33,2.33,2.33,2.33,2.33	300	200	1
12	6	1.30	1.30	2.00	-	300	200	1
13	20	4.88	4.00	7.50	1.02,1.02,1.02,1.02,1.02,1.02,1.02,1.02,1.02,1.03,1.02,1.02,1.02,1.03,1.02,1.02,1.02,1.03,1.02,1.02,1.02,1.03,1.02,1.02,1.02,1.02	300	200	1
14	20	4.88	4.00	7.50	1.02,1.02,1.02,1.02,1.02,1.02,1.02,1.02,1.02,1.30,1.02,1.02,1.02,1.30,1.02,1.02,1.02,1.12,1.02,1.02,1.02,1.12,1.02,1.02,1.02,1.47	300	200	1
15	20	14.70	14.70	7.00	2.33,2.33,2.33,2.33,2.33,2.33,2.33,2.33,2.33,2.33,2.33,2.33,2.33,2.33,2.33,2.33,2.33,2.33,2.33,2.33,2.33,2.33,2.33,2.33,2.33,2.33	300	200	1
16	20	14.70	14.70	7.00	2.33,2.33,2.33,2.33,2.33,2.33,2.33,2.33,2.33,2.33,2.33,2.33,2.33,2.33,2.33,2.33,2.33,2.33,2.33,2.33,2.33,2.33,2.33,2.33,2.33,2.33	300	200	1

Member Design Capacity

Member ID	Φ_tP_n (kip)	Φ_cP_n (kip)	Φ_bM_{zn} (k-ft)	Φ_bM_{yn} (k-ft)	Φ_vV_{yn} (kip)	Φ_vV_{zn} (kip)
1	377.97	286.33	83.29	83.29	113.39	113.39
2	251.01	248.88	27.16	27.16	75.30	75.30
3	151.65	150.70	20.17	14.14	54.12	28.95
4	151.65	145.15	20.17	14.14	54.12	28.95
5	151.65	149.10	20.17	14.14	54.12	28.95
6	151.65	150.70	20.17	14.14	54.12	28.95
7	151.65	149.10	20.17	14.14	54.12	28.95
8	159.30	15.83	46.90	6.46	56.26	44.91
9	75.10	66.32	4.25	4.25	22.53	22.53
10	151.65	145.15	20.17	14.14	54.12	28.95

11	159.30	15.83	46.90	6.46	56.26	44.91
12	251.01	248.88	27.16	27.16	75.30	75.30
13	159.30	116.35	31.17	6.46	56.26	44.91
14	159.30	116.35	31.17	6.46	56.26	44.91
15	159.30	15.83	46.90	6.46	56.26	44.91
16	159.30	15.83	46.90	6.46	56.26	44.91

Design Ratio

Member ID	P	M_z	M_y	V_y	V_z	(P,M_z,M_y)	Worst LC	KL/r	δ	Status
1	0.062	0.657	0.000	0.034	0.000	0.665	#32	0.308	Not Required	Pass
2	0.001	0.578	0.138	0.116	0.026	0.717	#13	0.036	Not Required	Pass
3	0.001	0.898	0.011	0.090	0.002	0.902	#13	0.046	Not Required	Pass
4	0.001	0.752	0.041	0.075	0.008	0.773	#13	0.082	Not Required	Pass
5	0.001	0.557	0.043	0.089	0.011	0.568	#13	0.076	Not Required	Pass
6	0.001	0.898	0.011	0.090	0.002	0.902	#13	0.046	Not Required	Pass
7	0.001	0.557	0.043	0.089	0.011	0.568	#13	0.076	Not Required	Pass
8	0.000	0.195	0.072	0.047	0.003	0.257	#13	Not Required	Not Required	Pass
9	0.006	0.101	0.029	0.001	0.000	0.132	#13	0.206	Not Required	Pass
10	0.001	0.752	0.041	0.075	0.008	0.773	#13	0.082	Not Required	Pass
11	0.000	0.233	0.072	0.056	0.003	0.295	#13	Not Required	Not Required	Pass
12	0.001	0.578	0.138	0.116	0.026	0.717	#13	0.036	Not Required	Pass
13	0.002	0.565	0.112	0.069	0.004	0.644	#13	0.204	Not Required	Pass
14	0.002	0.485	0.112	0.058	0.004	0.555	#13	0.204	Not Required	Pass
15	0.000	0.233	0.072	0.056	0.003	0.295	#13	Not Required	Not Required	Pass
16	0.000	0.195	0.072	0.047	0.003	0.257	#13	Not Required	Not Required	Pass

Definitions

Φ_t	Safety factor for tensile
Φ_c	Safety factor for compression
Φ_b	Safety factor for flexure
Φ_v	Safety factor for shear
E	Modulus of elasticity
F_y	Specified minimum yield stress
F_u	Specified minimum tensile strength
A	Cross-sectional area
J	Torsional constant
I_{yp}	Moment of inertia about the Y axes
I_{zp}	Moment of inertia about the Z axes
I_w	Warping constant
S_{yp}	Plastic section modulus about the Y axis
S_{zp}	Plastic section modulus about the Z axis
KL	Effective length
C_b	Buckling modification factor (from all load combinations)
L_b	Length between braced points
LST	Limited slenderness for tension
LSC	Limited slenderness for compression
LD	Limited deflection
P_n	Nominal axial strength (tension/comression)
M_n	Nominal flexural strength (about Z/Y axis)
V_n	Nominal shear strength (along Z/Y axis)
P	Design ratio in case of axial force
M_z	Design ratio in case of bending about Z axis
M_y	Design ratio in case of bending about Y axis
V_y	Design ratio in case of shear along Y axis
V_z	Design ratio in case of shear along Z axis
(P,M_z,M_y)	Design ratio in case of axial force and bending action
KL/r	Design ratio in case of section slenderness
δ	Design ratio in case of member deflection
OK	Capacity is provided
NG	Capacity is not provided

NS	Capacity is not provided

REFERENCES	CALCULATIONS	RESULTS

SkyCiv Foundation Design

Pile Foundation

Design Information :

Design code : IBC 2021 (International Building Code)
Unit System : Imperial

Pile Input

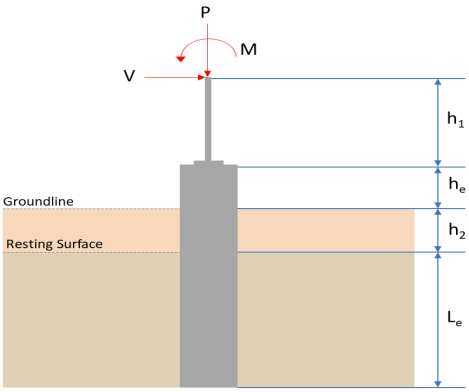

Geometry

Pile shape: rectangular
$b = 48\ \text{in}$ - Pile width
$D = 48\ \text{in}$ - Pile depth
$L = 7\ \text{ft}$ - Total pile length
$h_1 = 0\ \text{ft}$ - Lateral load height from the top of the pile,
$h_2 = 0\ \text{ft}$ - Depth to resisting surface
$h_e = 0\ \text{ft}$ - Length of pile above the ground

Tabulation of Soil Parameters

Layer	Label	Allowable Bearing Pressure (q_a) (psf)	Allowable Lateral Pressure (R) (psf/ft)
1	Sand, silty sand, clayey sand, silty gravel & clayey gravel	2000.000	150.000

Tabulation of Loads

Load Component	ASD	LRFD
P (kip)	11.435	17.789
V_x (kip)	-2.335	-3.892
V_z (kip)	0.000	0.000
M_x (kipft)	0.000	0.000
M_z (kipft)	32.652	54.704

Material Properties

$f'_{ck} = 2.5\ \text{ksi}$ - Concrete strength,

Required depth to resist lateral loads (ASD)

H - Point of application of the lateral load

$$H = h_1 + h_2 + h_e$$

$$H = (0\ \text{ft}) + (0\ \text{ft}) + (0\ \text{ft})$$

$$H = 0\ \text{ft}$$

Considering x-direction:

H_o - Lateral force per length of pile,

$$H_o = \frac{V_x}{1.57\ D}$$

$$H_o = \frac{(-2.335\ \text{kip})}{1.57 \times (48\ \text{in})}$$

$$H_o = -0.37182\ \text{kip/ft}$$

M_o - Moment per length of pile,

$$M_o = \frac{M_z + (V_x\ H)}{1.57\ D}$$

$$M_o = \frac{(32.652\ \text{kipft}) + ((-2.335\ \text{kip}) \times (0\ \text{ft}))}{1.57 \times (48\ \text{in})}$$

$$M_o = 5.1994\ \text{kipft/ft}$$

Required depth of embedment in earth:

$$L_x^3 - \left(14.14 \times \frac{H_o \times L_x}{R}\right) - \left(18.85 \times \frac{M_o}{R}\right) = 0$$

Solving the cubic equation:
$L_{e,x} = 6.4752\ \text{ft}$ - Required depth in x-direction,

Considering z-direction:

$L_{e,z} = 0\ \text{ft}$ - Required depth in z-direction,

Minimum embedded depth required:

$L_{e,req}$ - Depth of pile required,

$$L_{e,req} = MAX[L_{e,x}, L_{e,z}]$$

$$L_{e,req} = MAX[(6.4752\ \text{ft}), (0\ \text{ft})]$$

$$L_{e,req} = 6.475\ \text{ft}$$

L_e - Actual embedded length of pile,

$$L_e = L - h_e - h_2$$

$$L_e = (7\ \text{ft}) - (0\ \text{ft}) - (0\ \text{ft})$$

$$L_e = 7\ \text{ft}$$

$Ratio$ - Embedded depth

$$Ratio = \frac{L_{e,req}}{L_e}$$

$$Ratio = \frac{(6.475\ \text{ft})}{(7\ \text{ft})}$$

$$Ratio = 0.925$$

Status: **PASS**
Ratio: **0.930**

End-bearing Capacity (ASD)

A - Pile cross-section area

$$A = b\,D$$

$$A = (48\ \text{in}) \times (48\ \text{in})$$

$$A = 16\ \text{ft}^2$$

q - End-bearing pressure

$$q = \frac{P_v}{A}$$

$$q = \frac{(11.435\ \text{kip})}{(16\ \text{ft}^2)}$$

$$q = 0.71469\ \text{kip/ft}^2$$

Check bearing capacity ratio:

$Ratio$ - Capacity

$$Ratio = \frac{q}{q_a}$$

$$Ratio = \frac{(0.71469\ \text{kip/ft}^2)}{(2000\ \text{psf})}$$

$$Ratio = 0.35734$$

Status: **PASS**
Ratio: **0.360**

Czerniak

Lateral Soil Pressure (ASD):

L/D - Length to least lateral dimension ratio,

$$L/D = \frac{L}{D}$$

$$L/D = \frac{(7\ \text{ft})}{(48\ \text{in})}$$

$$L/D = 1.75$$

Since L/D $\leq$ 10,

Pile is short.

Considering x-direction:

$H_o = -0.37182\ \text{kip/ft}$ - Lateral force per length of pile,
$M_o = 5.1994\ \text{kipft/ft}$ - Overturning moment per length of pile,
a - Distance from resting surface to pivot point,

$$a = \frac{(4\ M_o\ L_e) + \left(3\ H_o\ L_e^2\right)}{(6\ M_o) + (4\ H_o\ L_e)}$$

$$a = \frac{(4 \times (5.1994\ \text{kipft/ft}) \times (7\ \text{ft})) + \left(3 \times (-0.37182\ \text{kip/ft}) \times (7\ \text{ft})^2\right)}{(6 \times (5.1994\ \text{kipft/ft})) + (4 \times (-0.37182\ \text{kip/ft}) \times (7\ \text{ft}))}$$

$$a = 4.8126\ \text{ft}$$

p - Earth pressure against the pile at distance a/2 from resting surface,

$$p = \frac{0.75\ [(4\ M_o) + (3\ H_o\ L_e)]^2}{L_e^2\ [(3\ M_o) + (2\ H_o\ L_e)]}$$

$$p = \frac{0.75 \times [(4 \times (5.1994\ \text{kipft/ft})) + (3 \times (-0.37182\ \text{kip/ft}) \times (7\ \text{ft}))]^{\ 2}}{(7\ \text{ft})^2 \times [(3 \times (5.1994\ \text{kipft/ft})) + (2 \times (-0.37182\ \text{kip/ft}) \times (7\ \text{ft}))]}$$

$$p = 0.24849\ \text{kip/ft}^2$$

s - Earth pressure against the pile at distance L_e,

$$s = \frac{6\ [(2\ M_o) + (H_o\ L_e)]}{L_e^2}$$

$$s = \frac{6 \times [(2 \times (5.1994\ \text{kipft/ft})) + ((-0.37182\ \text{kip/ft}) \times (7\ \text{ft}))]}{(7\ \text{ft})^2}$$

$$s = 0.95461\ \text{kip/ft}^2$$

Check lateral soil pressure capacity:

p_a - Allowable lateral soil pressure at depth a/2,

$$p_a = R\ \frac{a}{2}$$

$$p_a = (150\ \text{psf/ft}) \times \frac{(4.8126\ \text{ft})}{2}$$

$$p_a = 0.36095\ \text{kip/ft}^2$$

$Ratio$ - Lateral soil capacity

$$Ratio = \frac{p}{p_a}$$

$$Ratio = \frac{(0.24849\ \text{kip/ft}^2)}{(0.36095\ \text{kip/ft}^2)}$$

$$Ratio = 0.68844$$

Status: **PASS**
Ratio: **0.690**

p_s - Allowable lateral soil pressure at depth L_e,

$$p_s = R\ L_e$$

$$p_s = (150\ \text{psf/ft}) \times (7\ \text{ft})$$

$$p_s = 1.05\ \text{kip/ft}^2$$

$Ratio$ - Lateral soil capacity

$$Ratio = \frac{s}{p_s}$$

$$Ratio = \frac{(0.95461\ \text{kip/ft}^2)}{(1.05\ \text{kip/ft}^2)}$$

$$Ratio = 0.90916$$

Status: **PASS**
Ratio: **0.910**

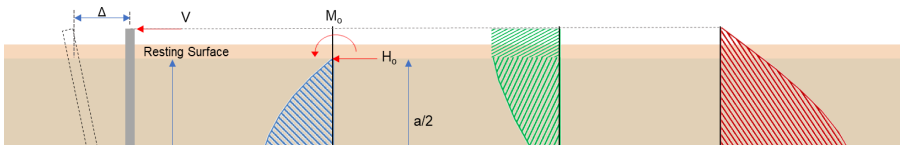

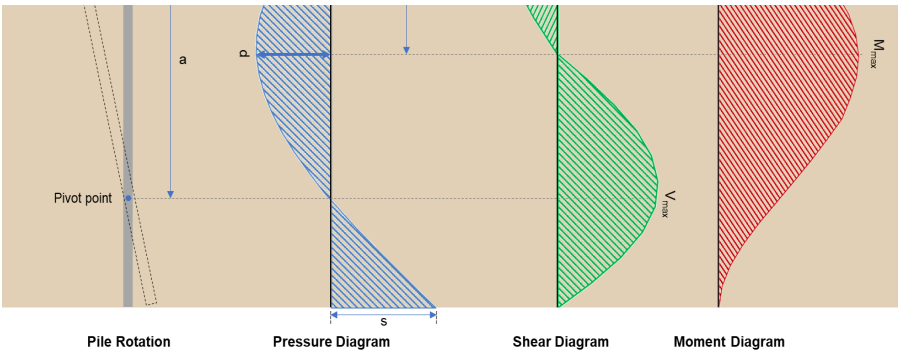

Shear force and Bending moment (x-direction, LRFD)

H_o - Lateral force per length of pile,

$$H_o = \frac{V_x}{1.57\,D}$$

$$H_o = \frac{(-3.892\ \text{kip})}{1.57 \times (48\ \text{in})}$$

$$H_o = -0.61975\ \text{kip/ft}$$

M_o - Moment per length of pile,

$$M_o = \frac{M_z + (V_x\,H)}{1.57\,D}$$

$$M_o = \frac{(54.704\ \text{kipft}) + ((-3.892\ \text{kip}) \times (0\ \text{ft}))}{1.57 \times (48\ \text{in})}$$

$$M_o = 8.7108\ \text{kipft/ft}$$

E - Distance from lateral load to resisting surface,

$$E = \frac{M_o}{H_o}$$

$$E = \frac{(8.7108\ \text{kipft/ft})}{(-0.61975\ \text{kip/ft})}$$

$$E = 14.055\ \text{ft}$$

a - Distance from resting surface to pivot point,

$$a = \frac{(4\,M_o\,L_e) + \left(3\,H_o\,L_e^2\right)}{(6\,M_o) + (4\,H_o\,L_e)}$$

$$a = \frac{(4 \times (8.7108\ \text{kipft/ft}) \times (7\ \text{ft})) + \left(3 \times (-0.61975\ \text{kip/ft}) \times (7\ \text{ft})^2\right)}{(6 \times (8.7108\ \text{kipft/ft})) + (4 \times (-0.61975\ \text{kip/ft}) \times (7\ \text{ft}))}$$

$$a = 4.8121\ \text{ft}$$

V_{max} - Max shear force located at depth a,

$$V_{max} = (H_o\,D)\left[1 - \left[3\left(\frac{4\,E}{L_e} + 3\right)\left(\frac{a}{L_e}\right)^2\right] + \left[4\left(\frac{3\,E}{L_e} + 2\right)\left(\frac{a}{L_e}\right)^3\right]\right]$$

$$V_{max} = ((-0.61975\ \text{kip/ft}) \times (48\ \text{in})) \times \left[1 - \left[3 \times \left(\frac{4 \times (14.055\ \text{ft})}{(7\ \text{ft})} + 3\right) \times \left(\frac{(4.8121\ \text{ft})}{(7\ \text{ft})}\right)^2\right] + \left[4 \times \left(\frac{3 \times (14.055\ \text{ft})}{(7\ \text{ft})} + 2\right) \times \left(\frac{(4.8121\ \text{ft})}{(7\ \text{ft})}\right)^3\right]\right]$$

$$V_{max} = 10.445\ \text{kip}$$

M_{max} - Max bending moment located at depth a/2,

$$M_{max} = (H_o\,D\,L_e)\left[\left(\frac{E}{L_e} + \frac{a}{2\,L_e}\right) - \left[\left(\frac{4\,E}{L_e} + 3\right)\left(\frac{a}{2\,L_e}\right)^3\right] + \left[\left(\frac{3\,E}{L_e} + 2\right)\left(\frac{a}{2\,L_e}\right)^4\right]\right]$$

$$M_{max} = ((-0.61975\ \text{kip/ft}) \times (48\ \text{in}) \times (7\ \text{ft})) \times \left[\left(\frac{(14.055\ \text{ft})}{(7\ \text{ft})} + \frac{(4.8121\ \text{ft})}{2 \times (7\ \text{ft})}\right) - \left[\left(\frac{4 \times (14.055\ \text{ft})}{(7\ \text{ft})} + 3\right) \times \left(\frac{(4.8121\ \text{ft})}{2 \times (7\ \text{ft})}\right)^3\right] + \left[\left(\frac{3 \times (14.055\ \text{ft})}{(7\ \text{ft})} + 2\right) \times \left(\frac{(4.8121\ \text{ft})}{2 \times (7\ \text{ft})}\right)^4\right]\right]$$

$$M_{max} = 34.978 \text{ kipft}$$

Minimum Reinforcement Check (LRFD)

Parameters:

$f'_{ck} = 2.5 \text{ ksi}$ - Concrete strength,
$f_{yk} = 60 \text{ ksi}$ - Longitudinal reinforcement strength,
$\phi = 0.65$ - Reduction factor for axial strength,
Table 22.4.2.1 $\alpha = 0.8$ - Alpha factor for axial strength,
$A_g = 2304 \text{ in}^2$ - Gross area of concrete,

Longitudinal reinforcement:

Required reinforcement due to axial load, $A_{st,required}$
22.4.2.2, 10.6.1.1 $A_{st,required}$

$$A_{st,required} = Min\left[\frac{\frac{P}{\phi\,\alpha} - \left(0.85\,f'_{ck}\,A_g\right)}{f_{yk} - \left(0.85\,f'_{ck}\right)}, \left(0.08\,A_g\right)\right]$$

$$A_{st,required} = Min\left[\frac{\frac{(17.789 \text{ kip})}{(0.65)\times(0.8)} - \left(0.85 \times (2.5 \text{ ksi}) \times \left(2304 \text{ in}^2\right)\right)}{(60 \text{ ksi}) - (0.85 \times (2.5 \text{ ksi}))}, \left(0.08 \times \left(2304 \text{ in}^2\right)\right)\right]$$

$$A_{st,required} = -84.005 \text{ in}^2$$

A_{min} - Governing minimum reinforcement area,

$$A_{min} = Max\left[A_{st,required}, \left(0.0018\,A_g\right)\right]$$

$$A_{min} = Max\left[\left(-84.005 \text{ in}^2\right), \left(0.0018 \times \left(2304 \text{ in}^2\right)\right)\right]$$

$$A_{min} = 4.1472 \text{ in}^2$$

n_{rebar} - Required number of reinforcement,

$$n_{rebar} = \frac{A_{min}}{A_{rebar}}$$

$$n_{rebar} = \frac{\left(4.1472 \text{ in}^2\right)}{\left(0.3068 \text{ in}^2\right)}$$

$$n_{rebar} = 14$$

A_{st} - Actual total reinforcement area,

$$A_{st} = n_{rebar}\,\frac{\pi\,d_{bar}^2}{4}$$

$$A_{st} = (14) \times \frac{\pi \times (0.625 \text{ in})^2}{4}$$

$$A_{st} = 4.2951 \text{ in}^2$$

$Ratio$ - Capacity

$$Ratio = \frac{A_{min}}{A_{st}}$$

$$Ratio = \frac{\left(4.1472 \text{ in}^2\right)}{\left(4.2951 \text{ in}^2\right)}$$

$$Ratio = 0.96556$$

Status: **PASS**
Ratio: **0.970**

25.2.3 s_{rebar} - Minimum spacing of reinforcement,

$$s_{rebar} = Max\left[1.5, \left(1.5\,d_{bar}\right)\right]$$

$$s_{rebar} = Max\left[1.5, (1.5 \times (0.625 \text{ in}))\right]$$

$$s_{rebar} = 1.5 \text{ in}$$

Ties:

25.7.2.2 Since longitudinal reinforcement is $\leq$ No. 10ø: Use #3(0.375 in)
25.7.2.1 s_{ties} - Maximum spacing of ties,

$$s_{ties} = Min\left[\left(16\,d_{bar}\right), \left(48\,d_{ties}\right), Min\left(D, b\right)\right]$$

$$s_{ties} = Min\left[(16 \times (0.625 \text{ in})), (48 \times (0.375 \text{ in})), Min\left((48 \text{ in}), (48 \text{ in})\right)\right]$$

$$s_{ties} = 10 \text{ in}$$

Summary:

Main reinforcement: **14 - #5 (0.625 in)**

Ties: **#3(0.375 in) - 10 in**

Axial Compression Strength (ACI 318-19, LRFD)

22.4.2.2 ϕP_N - Allowable axial compressive strength

$$\phi P_N = \phi\, 0.80\, \left[\left(0.85\, f'_{ck}\, \left[A_g - A_{st}\right]\right) + \left(f_{yk}\, A_{st}\right)\right]$$

$$\phi P_N = (0.65) \times 0.80 \times \left[\left(0.85 \times (2.5\ \text{ksi}) \times \left[\left(2304\ \text{in}^2\right) - \left(4.2951\ \text{in}^2\right)\right]\right) + \left((60\ \text{ksi}) \times \left(4.2951\ \text{in}^2\right)\right)\right]$$

$$\phi P_N = 2675.2\ \text{kip}$$

$Ratio$ - Capacity

$$Ratio = \frac{P}{\phi P_N}$$

$$Ratio = \frac{(17.789\ \text{kip})}{(2675.2\ \text{kip})}$$

$$Ratio = 0.0066496$$

Status: **PASS**
Ratio: **0.010**

Shear Strength (ACI 318-19, LRFD)

Parameters:

$b_w = 48\ \text{in}$ - Effective width,
22.5.2.2 d - Effective depth

$$d = 0.80\, D$$

$$d = 0.80 \times (48\ \text{in})$$

$$d = 38.4\ \text{in}$$

22.5.5.1.3 λ_s - size effect modification factor

$$\lambda_s = MIN\left[\sqrt{\frac{2}{1 + \frac{d}{10}}}, 1\right]$$

$$\lambda_s = MIN\left[\sqrt{\frac{2}{1 + \frac{(38.4\ \text{in})}{10}}}, 1\right]$$

$$\lambda_s = 0.64282$$

The following variables were converted to be consistent with empirical formula $f'_{ck} = 2.5\ \text{ksi} \rightarrow 2500\ \text{psi}$,
22.5.5.1.1 $V_{c,max}$ - Max shear strength of concrete

$$V_{c,max} = 5\, \lambda_s\, \sqrt{f'_{ck}}\, b_w\, d$$

$$V_{c,max} = 5 \times (0.64282) \times \sqrt{(2500\ \text{psi})} \times (48\ \text{in}) \times (38.4\ \text{in})$$

$$V_{c,max} = 296.21\ \text{kip}$$

The following variables were converted to be consistent with empirical formula $f'_{ck} = 2.5\ \text{ksi} \rightarrow 2500\ \text{psi}$, $P = 17.789\ \text{kip} \rightarrow 17789\ \text{lbf}$,
22.5.5.1.1(a) $V_{c,a}$ - Shear strength of concrete (a)

$$V_{c,a} = \left[2\, \lambda_s\, \sqrt{f'_{ck}} + \frac{P}{6\, A_g}\right]\, b_w\, d$$

$$V_{c,a} = \left[2 \times (0.64282) \times \sqrt{(2500\ \text{psi})} + \frac{(17789\ \text{lbf})}{6 \times (2304\ \text{in}^2)}\right] \times (48\ \text{in}) \times (38.4\ \text{in})$$

$$V_{c,a} = 120.86\ \text{kip}$$

The following variables were converted to be consistent with empirical formula $f'_{ck} = 2.5\ \text{ksi} \rightarrow 2500\ \text{psi}$,
22.5.5.1.2 $V_{c,b}$ - Shear strength of concrete (b)

$$V_{c,b} = \left[2\, \lambda_s\, \sqrt{f'_{ck}} + \left(0.05\, f'_{ck}\right)\right]\, b_w\, d$$

$$V_{c,b} = \left[2 \times (0.64282) \times \sqrt{(2500\ \text{psi})} + (0.05 \times (2500\ \text{psi}))\right] \times (48\ \text{in}) \times (38.4\ \text{in})$$

$$V_{c,b} = 348.89\ \text{kip}$$

V_c - Governing shear strength of concrete

$$V_c = Min\left[V_{c,max}, V_{c,a}, V_{c,b}\right]$$

$$V_c = Min\left[(296.21\ \text{kip}), (120.86\ \text{kip}), (348.89\ \text{kip})\right]$$

$$V_c = 120.86\ \text{kip}$$

The following variables were converted to be consistent with empirical formula $f'_{ck} = 2.5\ \text{ksi} \rightarrow 2500\ \text{psi}$,

22.5.1.2 $V_{s,a}$ - Shear strength of steel (a)

$$V_{s,a} = 8\sqrt{f'_{ck}}\, b_w\, d$$

$$V_{s,a} = 8 \times \sqrt{(2500\ \text{psi})} \times (48\ \text{in}) \times (38.4\ \text{in})$$

$$V_{s,a} = 737.28\ \text{kip}$$

A_v - Ties rebar area,

$$A_v = \frac{\pi\, d_{ties}^2}{4}$$

$$A_v = \frac{\pi \times (0.375\ \text{in})^2}{4}$$

$$A_v = 0.11045\ \text{in}^2$$

22.5.8.5.3 $V_{s,b}$ - Shear strength of steel (b)

$$V_{s,b} = \frac{2\, A_v\, f_{ywk}\, d}{s_{ties}}$$

$$V_{s,b} = \frac{2 \times \left(0.11045\ \text{in}^2\right) \times (60\ \text{ksi}) \times (38.4\ \text{in})}{(10\ \text{in})}$$

$$V_{s,b} = 50.894\ \text{kip}$$

V_s - Governing shear strength of steel

$$V_s = MIN\left[V_{s,a}, V_{s,b}\right]$$

$$V_s = MIN\left[(737.28\ \text{kip}), (50.894\ \text{kip})\right]$$

$$V_s = 50.894\ \text{kip}$$

22.5.1.1 ϕV_n - Allowable shear strength

$$\phi V_n = \phi\ (V_c + V_s)$$

$$\phi V_n = (0.65) \times ((120.86\ \text{kip}) + (50.894\ \text{kip}))$$

$$\phi V_n = 111.64\ \text{kip}$$

Considering x-direction:

$V_{max} = 10.445\ \text{kip}$ - Maximum shear force in the x-direction,
$Ratio$ - Capacity

$$Ratio = \frac{V_{max}}{\phi V_n}$$

$$Ratio = \frac{(10.445\ \text{kip})}{(111.64\ \text{kip})}$$

$$Ratio = 0.093558$$

Status: **PASS**
Ratio: **0.090**

Flexural Strength (ACI 318-19, LRFD)

S_m - Section modulus

$$S_m = \frac{b\, D^2}{6}$$

$$S_m = \frac{(48\ \text{in}) \times (48\ \text{in})^2}{6}$$

$$S_m = 18432\ \text{in}^3$$

$\lambda = 1$ - Concrete modification factor (Normal concrete),
Allowable flexural strength:
M_n shall be the lesser of:
$\phi M_{n,1}$

$$\phi M_{n,1} = \phi \times 5 \times \lambda \times \sqrt{(f'_c)} \times S_m$$

$$\phi M_{n,1} = 0.65 \times 5 \times 1 \times \sqrt{(2.5ksi)} \times 18432.001in^3$$

$$\phi M_{n,1} = 249.600kipft$$

14.5.2.1b $\phi M_{n,2}$

$$\phi M_{n,2} = \phi\, 0.85\, f'_c\, S_m$$

$$\phi M_{n,2} = \phi\, 0.85\, f'_{ck}\, Z_m$$

$$\phi M_{n,2} = (0.65) \times 0.85 \times (2.5 \text{ ksi}) \times \left(18432 \text{ in}^3\right)$$

$$\phi M_{n,2} = 2121.6 \text{ kipft}$$

Therefore,
ϕM_n - Allowable flexural strength,

$$\phi M_n = MIN[\phi M_{n,1}, \phi M_{n,2}]$$

$$\phi M_n = MIN[(249.6 \text{ kipft}), (2121.6 \text{ kipft})]$$

$$\phi M_n = 249.6 \text{ kipft}$$

Considering x-direction:

$M_{max} = 34.978 \text{ kipft}$ - Maximum moment in the x-direction,
$Ratio$ - Capacity

$$Ratio = \frac{M_{max}}{\phi M_n}$$

$$Ratio = \frac{(34.978 \text{ kipft})}{(249.6 \text{ kipft})}$$

$$Ratio = 0.14013$$

Status: **PASS**
Ratio: **0.140**